SPV SERIES
ELECTRIC VIBRATORS

Installation and Operation Manual

Houston Vibrator, Inc.

SPV ROTARY ELECTRIC VIBRATORS

Houston Vibrator, Inc.
PO Box 801882
Houston, Texas 77280

1-800-320-4044
www.houstonvibrator.com

Congratulations on your purchase of an SPV Series Rotary Electric Vibrator. We would like to take this opportunity to thank you for choosing Houston Vibrator. We are proud to supply you with the finest vibration equipment in the world today.

In this manual, you will find specific information regarding the installation, operation and maintenance of this equipment, as well as safety precautions. Please read the manual carefully before beginning installation of the vibrator. Be sure to follow all instructions and precautions contained herein. Failure to do so could compromise the service life of the vibrator and/or your safety.

If you need clarification or further information about any of the topics in this manual, please feel free to contact HVI for assistance.

Thank you.

Houston Vibrator, Inc.

TABLE OF CONTENTS

1. **GENERAL INFORMATION**
   1.1 GENERAL NOTES..... 2
   1.2 WARRANTY..... 2
   1.3 WARRANTY RECOGNITION..... 2

2. **SAFETY PRECAUTIONS**..... 4

3. **HANDLING**
   3.1 RECEIVING..... 6
   3.2 HANDLING..... 6
   3.3 STOCKING..... 8

4. **INSTALLATION**
   4.1 PREPERATION..... 10
   4.2 INSTALLATION..... 12
   4.3 CONNECTION TO TERMINAL BLOCK..... 12
   4.4 CONNECTION TO MAIN POWER SOURCE..... 16
   4.5 CHECKING DIRECTION OF ROTATION..... 18
   4.6 CHECKING THE CURRENT..... 20
   4.7 CENTRIFUGAL FORCE ADJUSTMENT..... 22

5. **MAINTENANCE**
   5.1 GENERAL PROVISIONS..... 24
   5.2 PERIODIC LUBRICATION..... 26
   5.3 GREASE REPLACEMENT..... 28
   5.4 BEARINGS REPLACEMENT..... 36
   5.5 PERIODIC INSPECTIONS..... 38
   5.6 SPARE PARTS REPLACEMENT..... 38

6. **SPARE PARTS**..... 40

7. **TECHNICAL DATA**
   7.1 WIRING DIAGRAMS..... 41
   7.2 ELECTRICAL & MECHANICAL FEATURES..... 44
   7.3 MOUNTING AND WIRING DATA..... 51
   7.4 BEARINGS & LUBRICATION DATA..... 57
   7.5 EXPLODED PARTS DRAWINGS..... 63

8. **OUT OF SERVICE**
   8.1 TEMPORARILY SUSPENDING SERVICE..... 68
   8.2 DISPOSAL..... 68

APPENDIX A: BIN WALL MOUNTING INSTRUCTIONS..... 70

APPENDIX B: TROUBLESHOOTING..... 79

- FIGURE - DRAWINGS -

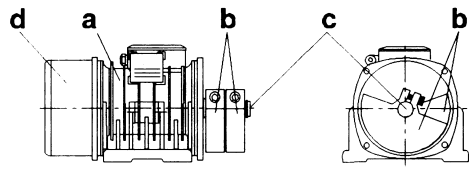

(fig.01)

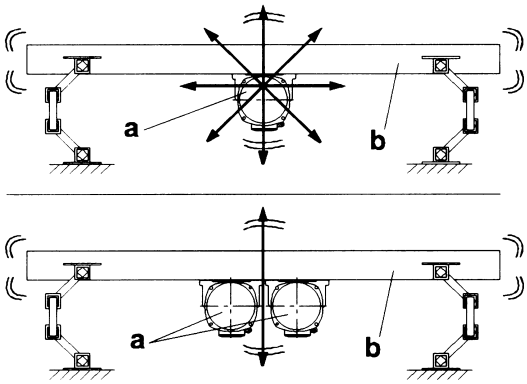

(fig.02)

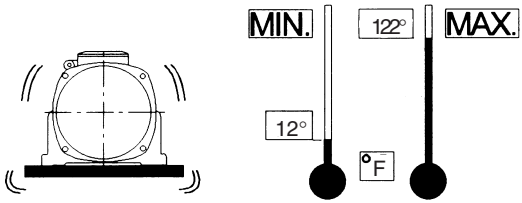

(fig.03)

12 MONTH WARRANTY

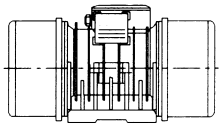

(fig.04)

1 GENERAL INFORMATION

1.1 GENERAL NOTES

The electric vibrator is composed of an asyncronous three phase or single phase motor (a), counter weights (b), located at the two ends of the rotor shaft (c), and weight covers (d) (fig.1).

Once started, the electric vibrator (a) generates a vibration, which is transmitted to the machine or structure (b) onto which it has been installed (fig.2).

SPV Series Vibrators are designed for continuous operation at the maximum force, in a temperate setting between 12°F and 122°F (-25°C and +40°C)(fig.3).

Standard models are characterized as follows:
Insulation class: F
Mechanical Protection: IP 65.7

1.2 WARRANTY

HVI offers a full one year warranty on the electric vibrator. This warranty extends for a period of 12 (twelve) months past the date of delivery, as specified on shipping documents received with the goods (fig.4).

The warranty covers free repair or replacement of only those parts which HVI deems defective. The warranty does not cover controller or electrical parts other than the vibrator, or those mechanical parts which will incur wear with normal use.

The warranty becomes void if damage to the vibrator is caused by improper installation, incorrect wiring, or improper use of the vibrator.

1.3 WARRANTY RECOGNITION

The warranty can only be recognized by HVI. Freight must be prepaid on all items returned for repair, including those items under warranty.

- FIGURE - DRAWINGS -

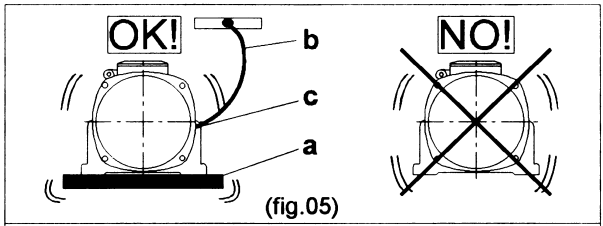

(fig.05)

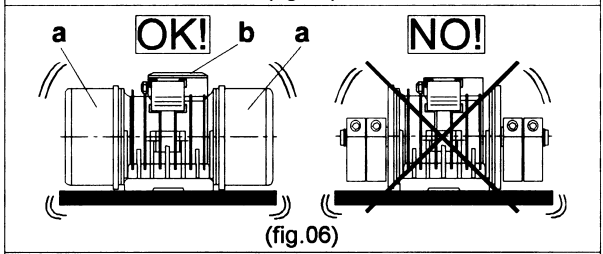

(fig.06)

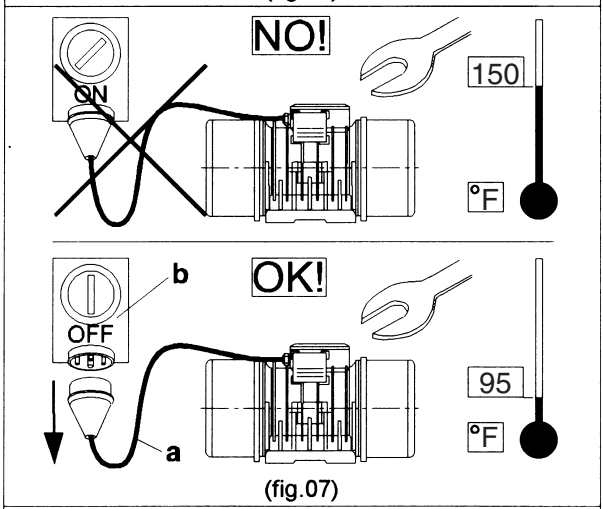

(fig.07)

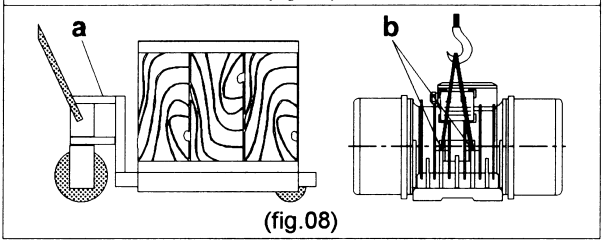

(fig.08)

2 SAFETY PRECAUTIONS

DO NOT start the electric vibrator before it is properly installed and linked to the main structure (a) with a safety cable (b), fastened securely to eyebolts (c) on the main casing (fig.5). DAMAGE TO VIBRATOR WILL OCCUR!!!

DO NOT start the electric vibrator without weight covers (a) or terminal box cover (b) in place (fig.6).

DO NOT perform maintenance or weight adjustments unless the power cord has been disconnected from the main power source, and the vibrator has been allowed to cool down to at least 95°F (35°C)(fig.7).

To safely move the vibrator before removing it from the shipping crate, always use a fork lift or pallet jack (a). If the vibrator has already been removed from the crate, use the eyebolts on the main casing (fig.8).

- FIGURE - DRAWINGS -

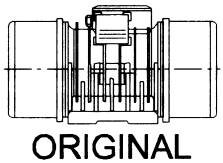

(fig.09)

IMPORTANT

(fig.10)

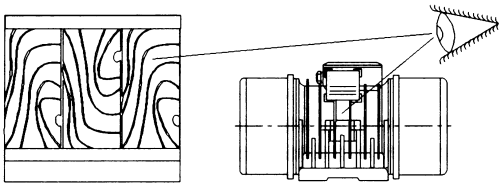

(fig.11)

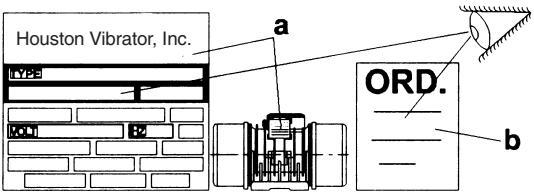

(fig.12)

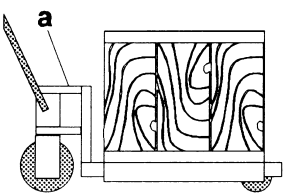

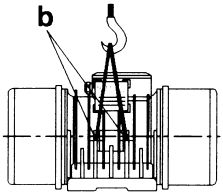

(fig.13)

2 SAFETY (CONT'D)

The vibrator must operate in its original condition, with the exception of weight adustments performed in accordance with the instructions in section 4.7 (fig.9).

The vibrator controls must be located and secured in such a manner that the vibrator cannot be started accidentally or by unauthorized personnel.

All persons responsible for the installation, operation, and maintenance of this vibrator must carefully read and understand all information in this manual (fig.10). All instructions and precautions in the manual must be strictly observed. Keep this manual accessible to the operator for consultation before beginning installation, and before routine maintenance or adjustments are performed.

3 HANDLING

3.1 RECEIVING

Inspect the vibrator immediately upon receipt to insure that no damage occurred during shipment (fig.11).

Check the information on the packing slip against the nameplate on the vibrator to verify that you have received the correct merchandise (fig.12).

Should you discover any damage or irregularities, contact the freight carrier and HVI immediately. Be sure to retain the original packaging for freight inspectors.

3.2 HANDLING

DO NOT jar or shock the vibrator during handling. This can cause serious damage to the vibrator.

Always use a fork lift or pallet jack to move the vibrator before unpacking. After the vibrator has been uncrated, use eyebolts on the main casing (fig.13).

- FIGURE - DRAWINGS -

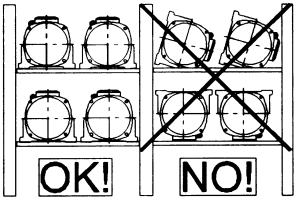

(fig.14)

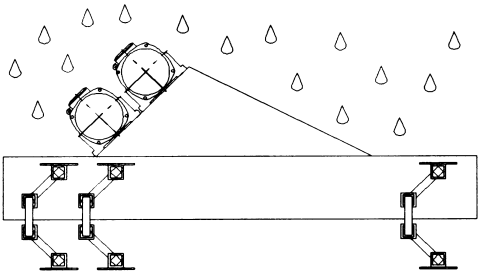

(fig.15)

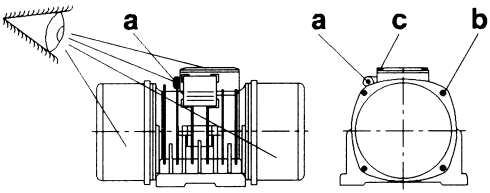

(fig.16)

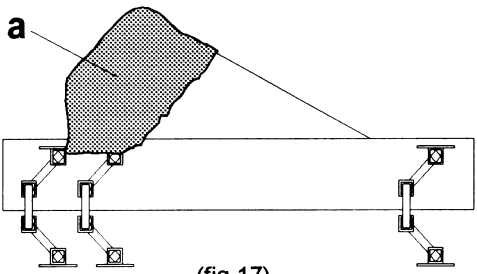

(fig.17)

3.3 STOCKING

Prior to installation, the electric vibrator must be stored upright in a clean, dry room away from excessive heat, cold, and moisture (fig.14).

If the vibrator has already been installed on a machine or structure that must be stored in an exposed area (fig.15), proceed as follows:

- remove the cable-grip (a), and seal the opening to the terminal box (c) with a proper plug (fig.16).
- fully tighten all bolts on the weight covers (b) and terminal box (c)(fig. 16).
- protect the electric vibrator against rain using a cover that allows air circulation (fig.17).

- FIGURE - DRAWINGS -

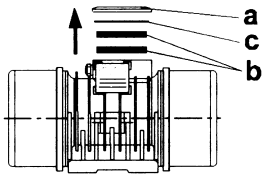

(fig.18)

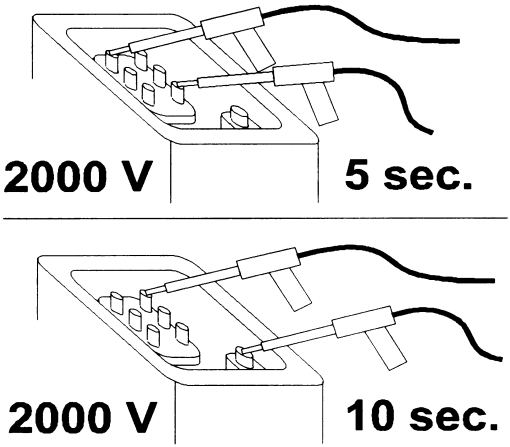

(fig.19)

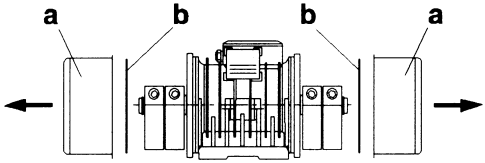

(fig.20)

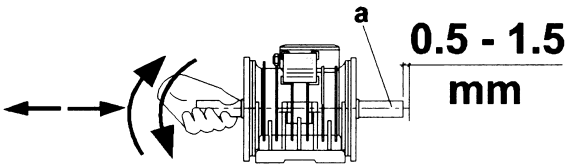

(fig.21)

4 INSTALLATION

4.1 PREPARATION

Remove the terminal box cover (a) and sponges (b). Be careful not to damage the O-ring seal (c)(fig.18).

Check for insulation resistance between each of the six terminal screws and the ground connection using a megohm insulation tester set at 2000 volts for 10 seconds. Using the same method, test from each of the six terminal screws to each of the others for 5 seconds (fig.19).

Carefully remove both weight covers (a), making sure not to damage the O-ring seals (b)(fig.20).

Check by hand that the rotor shaft (a) turns freely and has retained its original axial-gap within 0.5 - 1.5 mm (fig.21).

If the vibrator has been stored and not in use for more than two years, follow the instructions in section 5.3 for replacing grease.

- FIGURE - DRAWINGS -

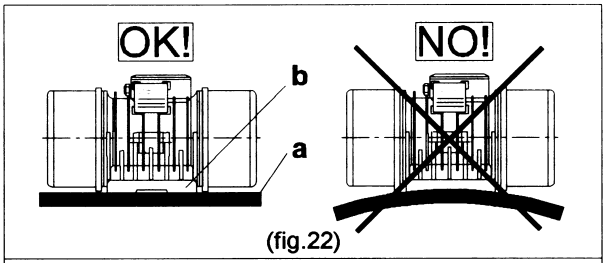

(fig.22)

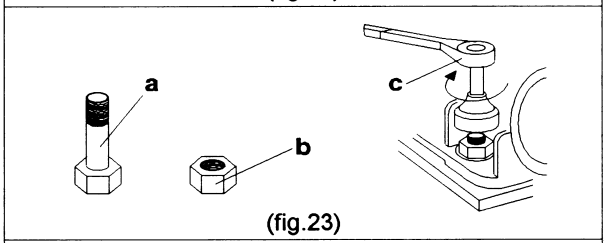

(fig.23)

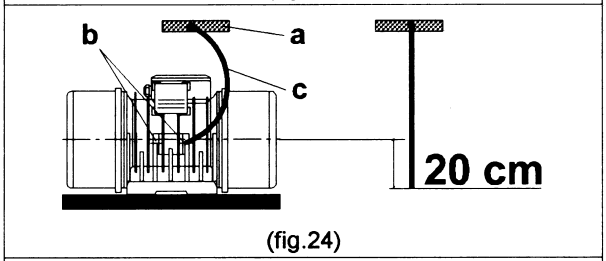

(fig.24)

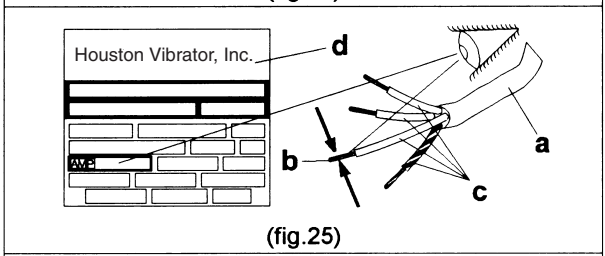

(fig.25)

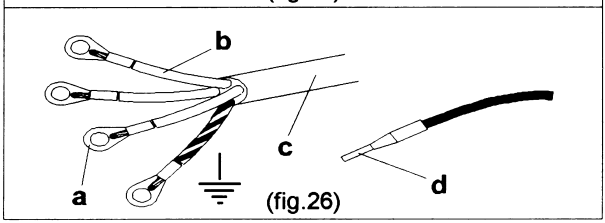

(fig.26)

4.2 INSTALLATION

Make sure that the surface onto which the vibrator will be mounted is completely flat (within ±1/32”), clean, and free of any paint (fig.22).

Attach the electric vibrator to the surface with grade 5 or better bolts (a), bellville washers, and nuts (b). Use a dinamometric torque wrench (c) set at the torque given in Table 7.3, pages 51-56 (fig.23).

WARNING
DO NOT LEAVE ANY OF THE MOUNTING HOLES UNUSED! DAMAGE TO VIBRATOR WILL OCCUR.

Secure the electric vibrator to the mounting surface (a) with a steel safety cable (c) of suitable diameter locked to the eyebolts (b) on the main casing . The safety cable should be no longer than 7-7/8 inches (20 cm) in length, and must be able to support the weight of the vibrator should it become separated from the mounting surface (fig.24).

4.3 CONNECTION TO THE TERMINAL BLOCK

To connect the vibrator to the terminal, use flexible electrical cable (a) that can withstand room temperatures from -22°F to 194°F(-30°C - 90°C)(SOW/SJOW) with outer diameter as specified in Table 7.3, pages 51-56 (fig.25).

The guage of the wire must not be lower than that given in Table 7.3 (fig.25).

Always use eyelet terminals (a) when connecting the conductors (b) of the power cord (c) to the terminal block. Use drill terminals (d) when connecting to the thermistor on all frame sizes 10 and larger (fig.26).

- FIGURE - DRAWINGS -

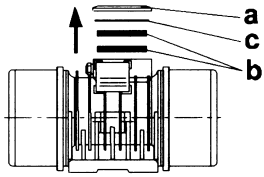

(fig.27)

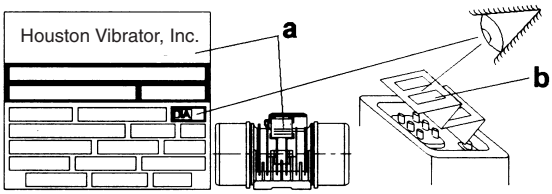

(fig.28)

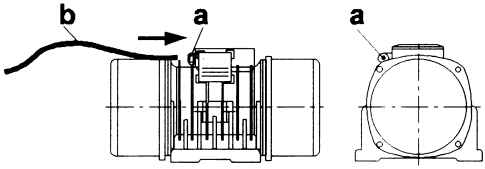

(fig.29)

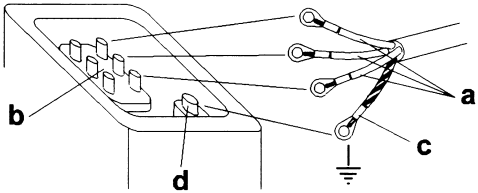

(fig.30)

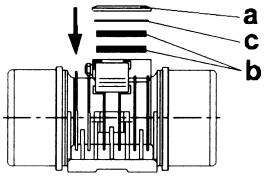

(fig.31)

4.3 CONNECTION TO THE TERMINAL BLOCK CONT'D

Connect the electric cable to the terminal block as follows:

Remove the terminal box cover (a) and sponges (b), taking care not to damage the O-ring seal (c) (fig.27).

Remove the wiring diagram (b) from the terminal box. Refer to the nameplate (a) to determine which wiring diagram refers to your particular model vibrator (fig.28).

Release the cable grip (a) and insert the feeding cable (b) into the terminal box (fig.29).

Connect the conductors (a) to the terminal block (b) as indicated in your wiring diagram; always connect the green conductor (c) to the ground screw (d)(fig.30).

Lock the eyelet terminals with wire nuts and washers to prevent loosening.

Firmly grasp the power cord (b) while tightening the cable grip (b)(fig.29).

Replace the sponge seal (b), carefully reposition the O-ring seal (c), and secure the terminal box cover (fig.31).

- FIGURE - DRAWINGS -

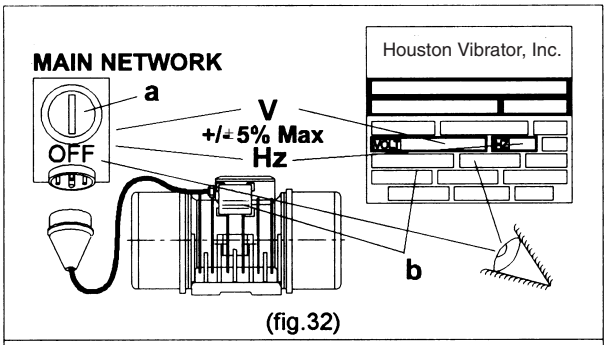

(fig.32)

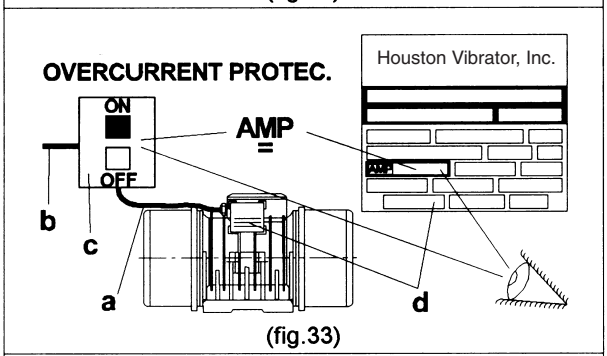

(fig.33)

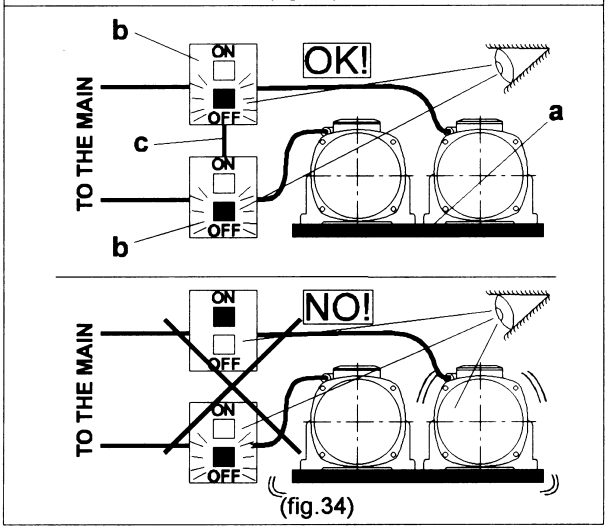

(fig.34)

4.4 CONNECTION TO THE MAIN POWER SOURCE

Check to make sure that the voltage and frequency are within the values given on the nameplate; fluctuations should be no more than ±5% (fig.32).

Make sure that the bending radius of the power cord is no smaller than that specified in Table 7.3.

Connect the power cord (a) to the main power source (b), and **ensure that the electric vibrator has proper overload protection** (c) rated for the amp value stated on the vibrator nameplate (d)(fig.33).

Connect the green to the ground.

If two vibrators are installed on the same structure and must work together with opposite rotational directions, each vibrator must have its own overload protection (b). Both of the circuit breakers must be wired together in such a manner (c) that if one vibrator is shut off, the other must shut off as well (fig.34).

WARNING
VIBRATOR CAN BE DESTROYED IF INSTALLED WITHOUT OVERLOAD PROTECTION!

INSTALLING VIBRATOR WITHOUT OVERLOAD PROTECTION WILL VOID WARRANTY!

- FIGURE - DRAWINGS -

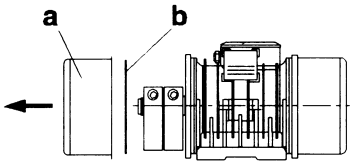

(fig.35)

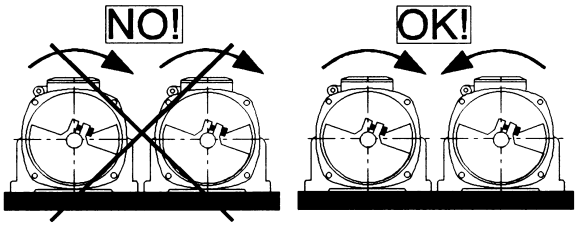

(fig.36)

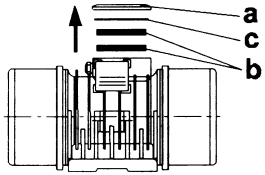

(fig.37)

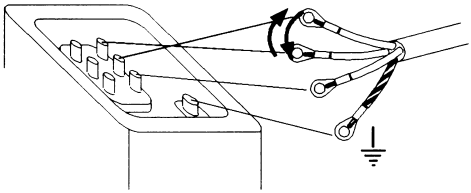

(fig.38)

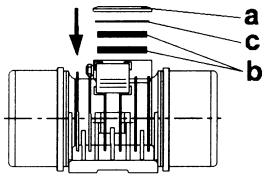

(fig.39)

4.5 CHECKING DIRECTION OF ROTATION

For special applications where two vibrators are working as a pair with opposite directions of rotation, the rotation directions must be checked as follows:

- Remove one of the weight covers (a) from each vibrator, taking care not to damage the O-ring seal (b)(fig.35).
- Run the vibrators briefly (no longer than 3 seconds), and check visually that the rotation of each vibrator is opposite of the other.

NOTE
TWO VIBRATORS MOUNTED ON THE SAME STRUCTURE WORKING AS A PAIR MUST *ALWAYS* ROTATE IN OPPOSITE DIRECTIONS! THIS IS COMMONLY CALLED COUNTER-ROTATIONAL OPERATION (fig.36)

If the vibrators are not rotating opposite each other, proceed as follows:

NOTE
FOR SINGLE PHASE VIBRATORS, REFER TO WIRING DIAGRAM ON PAGE 41 BEFORE CHANGING YOUR CONNECTIONS.

- Remove the terminal box cover (a) and the sponge seal (b). Make sure not to damage the O-ring seal (c)(fig.37).
- Invert two conductors (not the ground)(fig.38).
- Replace the sponge seal (b) and terminal box cover (a), making sure not to damage the O-ring seal (c)(fig.39).
- Replace the weight covers, making sure that the O-ring seal is not damaged.

- FIGURE - DRAWINGS -

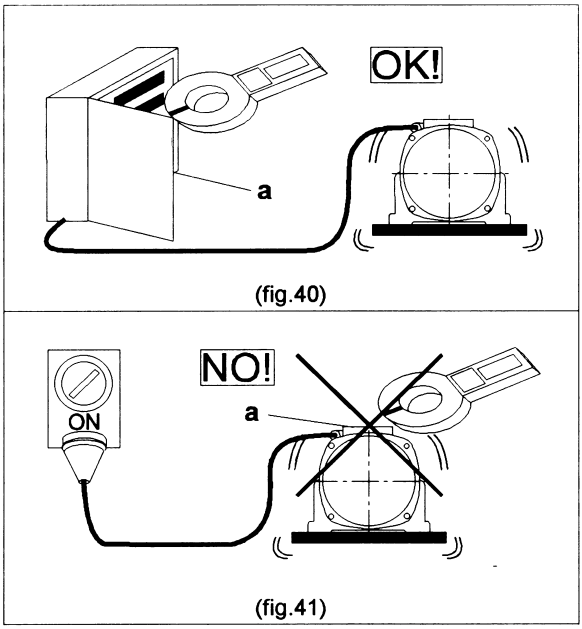

(fig.40)

(fig.41)

4.6 CHECKING THE CURRENT

In the interest of safety, the current check should be carried out inside the electrical control box (a) after the overload protection(fig.40).

WARNING
DO NOT CHECK CURRENT IN THE TERMINAL BOX!
DANGER OF SHOCK.

Check the current separately for each phase.

While running, the current is not to exceed the value indicated on the vibrator nameplate. If current is higher than allowed, proceed as follows:

- test voltage and frequency of power source
- check isolation of the vibrating machine
- check tightness of mounting bolts
- check centrifugal force adjustment
- verify size of vibrator according to the application

If the electric vibrator is installed on an isolated machine, the current is generally 50% of the value indicated on the vibrator nameplate.

If the electric vibrator is installed on a non-isolated machine such as a silo, hopper, or mold, the current may be close to or even higher than the value indicated on the vibrator nameplate. If this is the case, it is advised that the centrifugal force be decreased by adjusting the end weights according to the instructions in section 4.7.

- FIGURE - DRAWINGS -

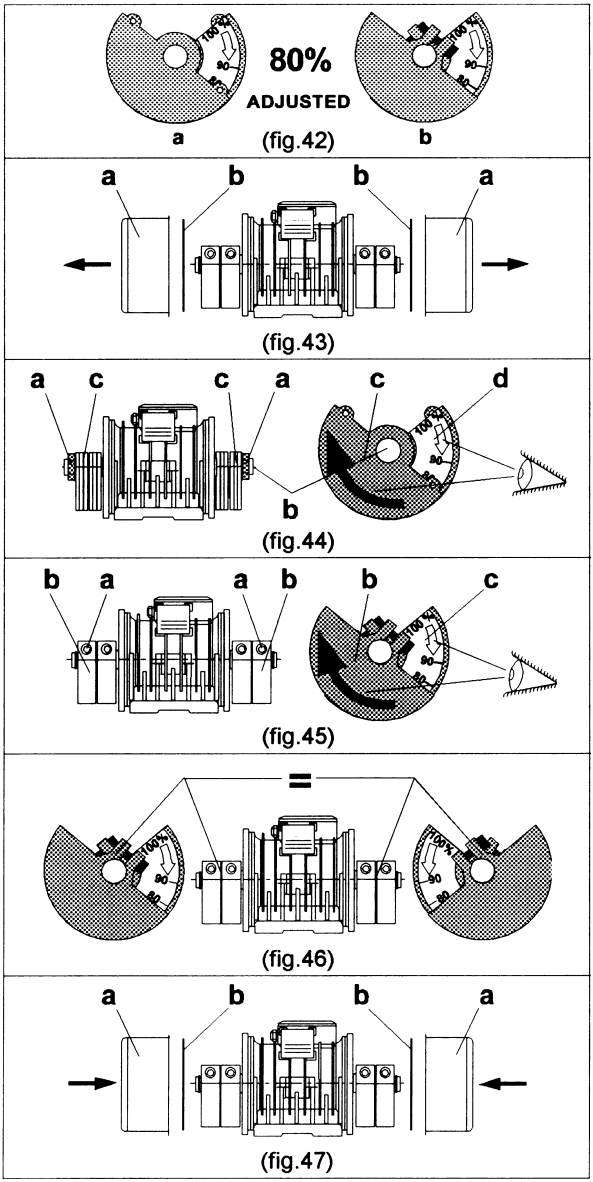

4.7 CENTRIFUGAL FORCE ADJUSTMENT

During factory assembly, the electric vibrator is set to supply 80% of the maximum centrifugal force (fig.42). The centrifugal force is infinitely adjustable from zero percent to 100 percent of the maximum.

To adjust the force on vibrators with laminated weights:

- remove both weight covers (a) and O-ring seals (b) (fig.43).
- loosen the blocking nuts (a) on the rotor shaft (b) and turn the external laminated weights (c) in the direction of the arrows on the adjusting discs (d) to the desired value (fig.44).
- fully tighten the blocking nuts (a) carefully so that the weights do not shift from the desired position (fig.44).

To adjust the force for vibrators with clamped weights:

- remove both weight covers (a) and O-ring seals (b) (fig.43).
- loosen the clamping nuts (a) of the external clamped weights (b) and turn them in the direction of the arrows on the adjusting discs (c) to the desired value (fig.45).
- fully tighten the clamping nuts (a) carefully so that the clamping weights do not shift from the desired position (fig.45).

After adjusting the weights on both ends of the rotor shaft, replace the weight covers (a) making sure that the O-ring seals are correctly positioned in their housings (fig.47).

CAUTION

•VIBRATOR WEIGHTS MUST BE EQUALLY ADJUSTED ON BOTH SIDES OF THE ROTOR SHAFT (fig.46).

•WHEN TWO ELECTRIC VIBRATORS ARE INSTALLED AS A PAIR FOR COUNTERROTATIONAL OPERATION, THEIR WEIGHTS MUST ALWAYS BE EQUALLY ADJUSTED.

IMPROPER WEIGHT ADJUSTMENT WILL CAUSE DAMAGE TO VIBRATOR.

- FIGURE - DRAWINGS -

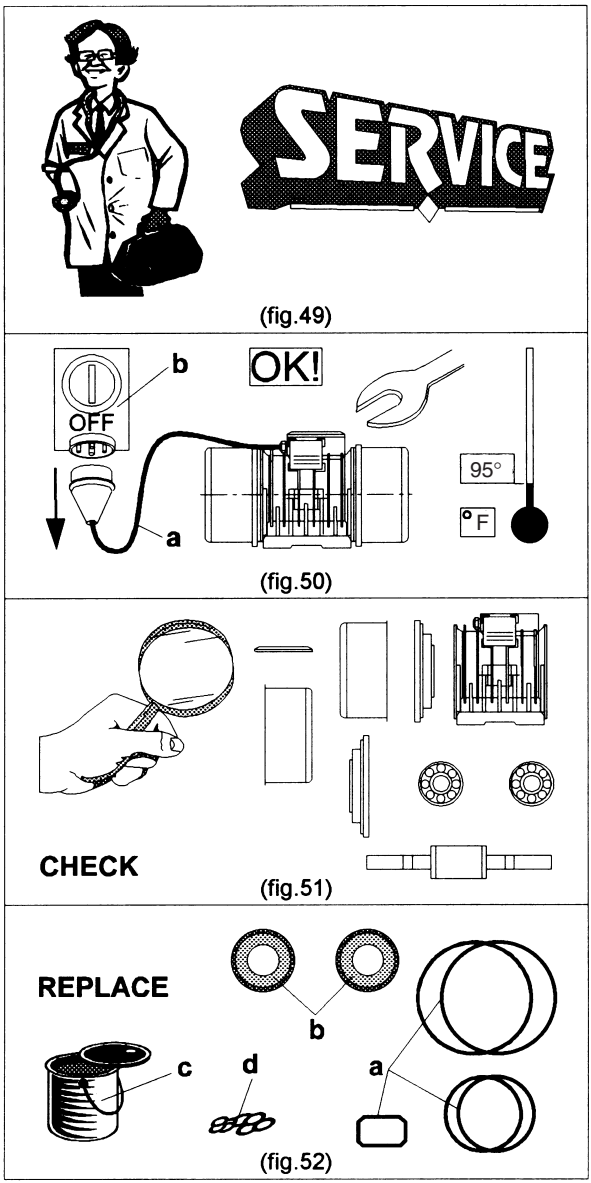

5 MAINTENANCE

5.1 GENERAL MAINTENANCE PROCEDURES

All maintenance operations must be performed by specialized personnel in a clean environment with all necessary equipment, or by an authorized service center (fig 49).

The correct maintenance provides safety and reliability. If the electric vibrator is not maintained properly, serious damage can occur.

The vibrator must be disconnected from the main power source (b) and must cool down to 95°F (35°C) before any maintenance operations are begun (fig.50).

WARNING
FAILURE TO DISCONNECT VIBRATOR FROM MAIN POWER SOURCE CAN CAUSE SERIOUS BODILY HARM!

Before reassembling the vibrator after maintenance, always check the condition of wearing parts, and carefully remove and replace old grease from the bearings (fig.51).

To extend the service life of the vibrator, O-ring seals (a), V-ring grease seals (b), washers (d), and grease (c) should be replaced periodically (fig.52).

- FIGURE - DRAWINGS -

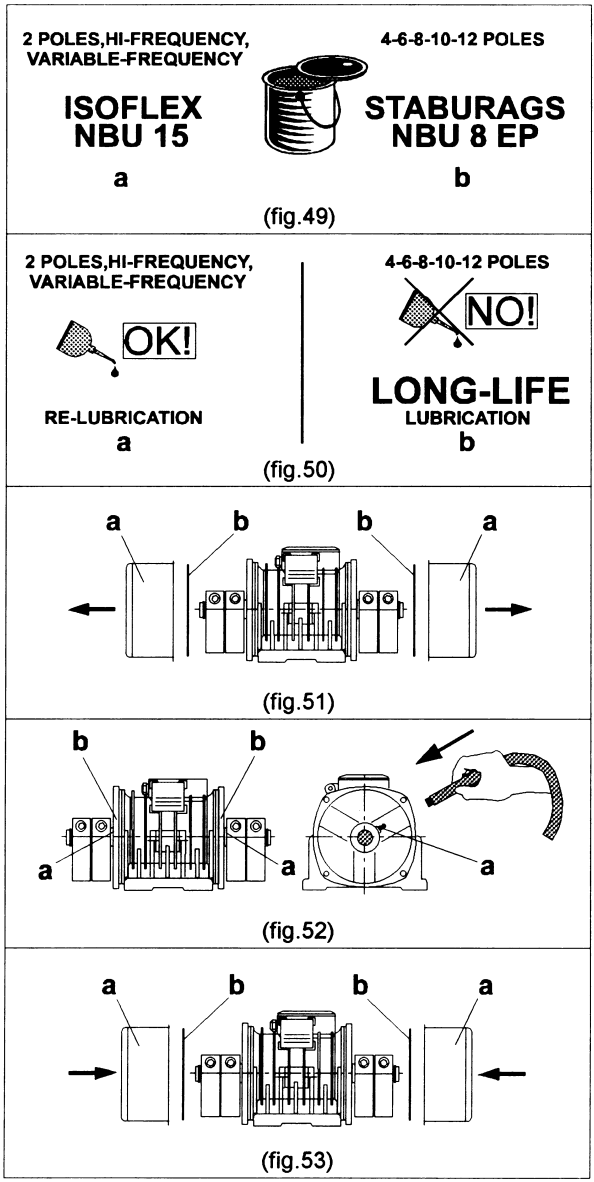

5.2 PERIODIC LUBRICATION

All 2 pole, high frequency, and variable frequency models are lubricated with KLUEBER ISOFLEX NBU 15 grease during assembly (fig.49a). Frequencies of relubrication, if needed, are given in Table 7.4 (fig.50a).

All 4, 6, 8, 10, and 12 pole models are lifetime lubricated during assembly using KLUEBER STABURAGS NBU 8 EP grease (fig.49b). Therefore, they should not need lubrication during the lifespan given in the Life Expectancy column of Table 7.4 (fig.50b). In the case of special applications and/or operating conditions, the operator may decide to top off the lubrication as described below.

After the Life Expectancy period, the old grease must be replaced following the instructions set forth in section 5.3.

Type and quantity of grease, and intervals of periodic lubrication are given in Table 7.4, under the periodic lubrication column.

CAUTION
DIFFERENT TYPES OF GREASE CAN SEVERLY COMPROMISE THE LIFE OF BEARINGS AND THE RELIABILITY OF THE VIBRATOR.
DO NOT MIX GREASE TYPES!

CAUTION
OVER-GREASING CAN SERIOUSLY DAMAGE THE VIBRATOR.

In case of ambient temperature below 32°F (0°C), top off the lubrication while the vibrator is still at working temperature. The vibrator should still be completely isolated as described in section 2.1.

To top off lubrication:

- Remove both weight covers (a) taking care not to damage the O-ring seals (b)(fig.51).
- Lubricate bearings with nipple greasers (a) located on the flanges (b)(fig.52).
- Replace both weight covers (a) making sure that the O-ring seals (b) have been correctly located in their housings (fig.53).

- FIGURE - DRAWINGS -

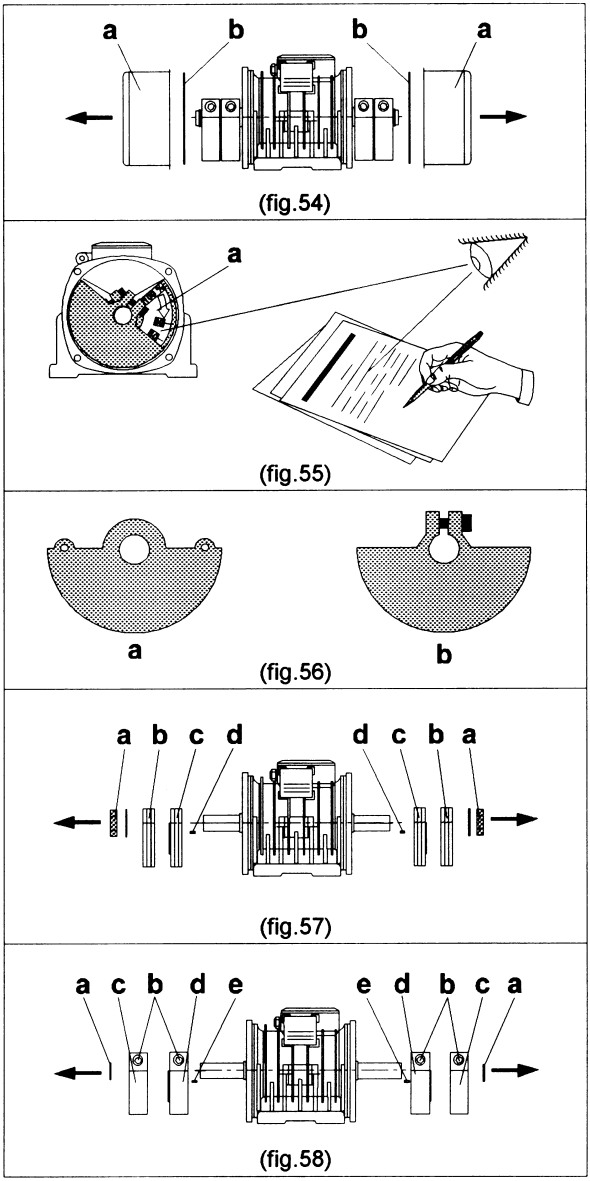

5.3 GREASE REPLACEMENT

Remove both weight covers (a) making sure not to damage the O-ring seals (b)(fig.54).

Note the force setting of the counter weights (fig.55).

For models with laminated weights (fig.56a):

loosen the blocking nut (a) and remove the external (b) and internal (c) weights and the key (d) on both sides of the rotor shaft (fig.57).

For models with clamped-weights (fig.56b):

remove the retaining clip (a), loosen the clamping bolts (b), and remove the external (c) and internal (d) clamped weight and the key (e) on both sides of the rotor shaft (fig.58).

- FIGURE - DRAWINGS -

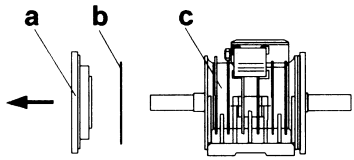

(fig.59)

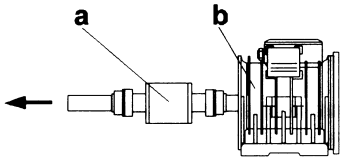

(fig.60)

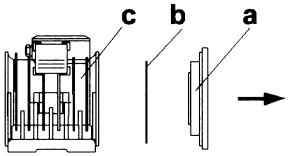

(fig.61)

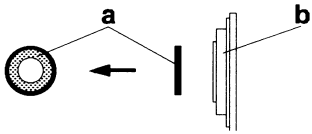

(fig.62)

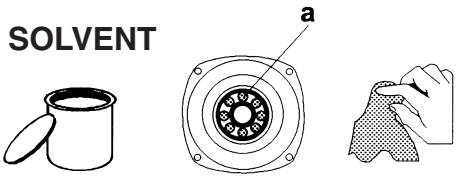

(fig.63)

5.3 GREASE REPLACEMENT CONT'D

Remove one flange (a) by inserting two screws into the threaded-pull holes. Be careful not to damage the O-ring seal (b). During extraction, the axial alignment of the flange (a) to the main casing (c) must be maintained in order to avoid damage (fig.59).

Remove the rotor shaft (a) taking care not to damage the stator inside the main casing (b)(fig.60).

Repeat the above instructions to remove the second flange (fig.61).

Remove the V-ring grease seals (a) from the flanges (b) to expose the old grease (fig.62).

Remove the old grease from the bearings (a) and wash them with a suitable solvent (fig.63).

- FIGURE - DRAWINGS -

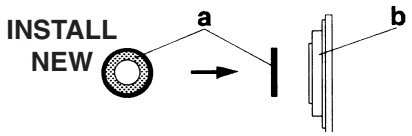

(fig.64)

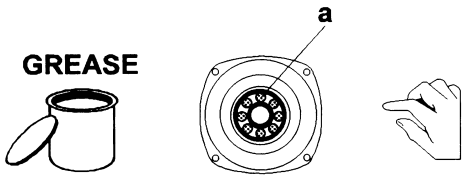

(fig.65)

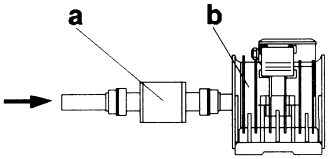

(fig.66)

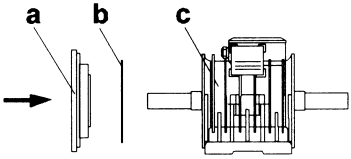

(fig.67)

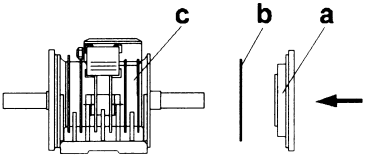

(fig.68)

5.3 GREASE REPLACEMENT CONT'D

Install new V-ring grease seals (a) into the flanges (b)(fig.64).

Lubricate the bearings (a) by hand with the type and quantity of grease specified in Table 7.4 under the grease replacement column. The grease must be spread inside the bearings' rollers with the fingers (fig.65).

Replace the rotor shaft (a) taking care not to damage the stator inside the main casing (b)(fig.66).

Replace the flanges (a) one at a time, making sure that the O-ring seal (b) is correctly located in its housing. The axial alignment of the flange (a) with the main casing (c) must be maintained during insertion in order to avoid damage (fig.68).

- FIGURE - DRAWINGS -

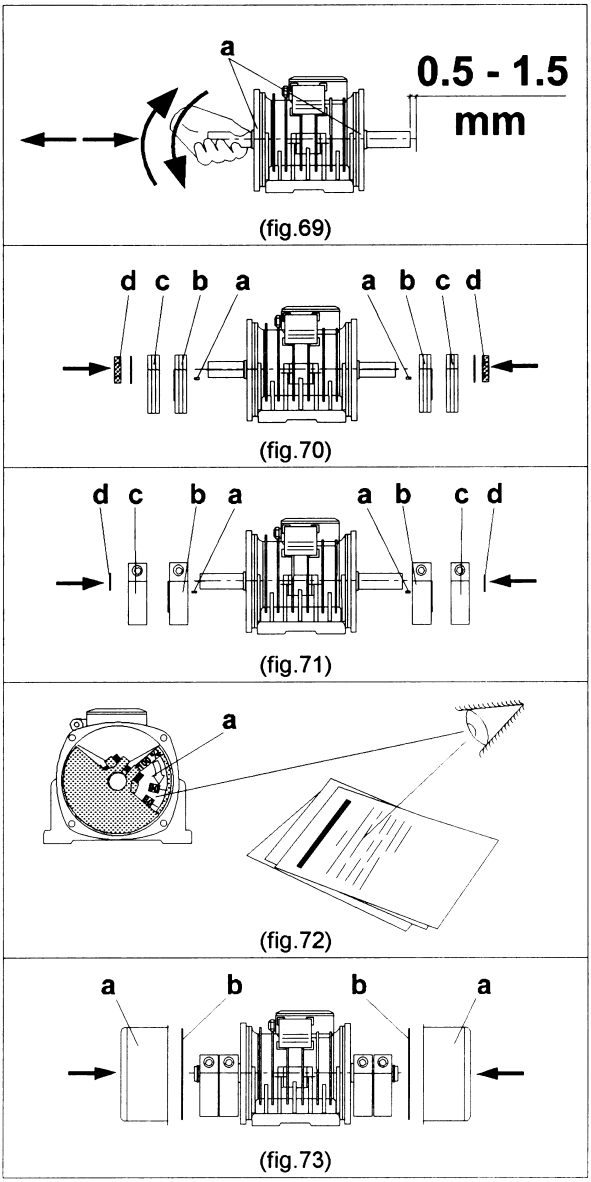

5.3 GREASE REPLACEMENT CONT'D

Fully tighten the flange screws (a) and check that the rotor shaft (b) turns freely and has maintained its axial gap between 0.5 and 1.5 mm; turn the rotor shaft (b) 20 or 30 times by hand to distribute the grease around the rollers (fig.69).

For models with laminated weights (fig.56a):

Replace the internal weights (b), rotor shaft keys (a), external weights (c), and the blocking nuts (d)(fig.70).

Reset the weights to the noted force setting(fig.72).

Carefully tighten the blocking nuts making sure that the external weights (c) do not shift from the desired position (fig.70-72).

For models with clamped weights (fig.56b):

Replace the internal weights (b), rotor shaft keys (a), external weights (c), and retaining clips (d)(fig.71).

Reset the weights to the previously noted force setting (fig.72).

Carefully tighten the clamping bolts making sure that the external weights (b) do not shift from the desired position (fig.71-72).

Replace both weight covers (a), making sure that the O-ring seals (b) are correctly located in their housings (fig.73).

- FIGURE - DRAWINGS -

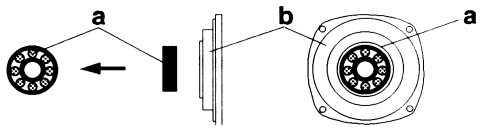

(fig.74)

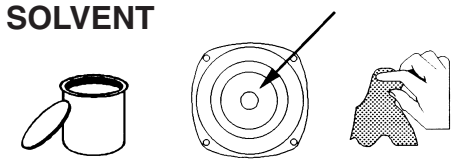

(fig.75)

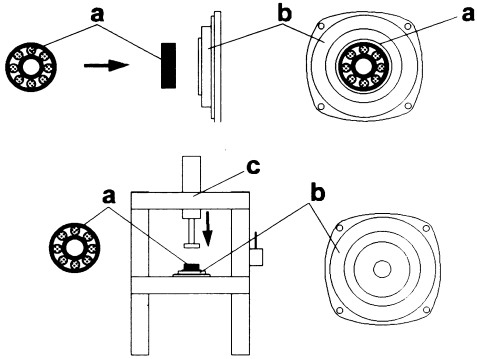

(fig.76)

5.4 BEARINGS REPLACEMENT

To replace bearings after the life expectancy given in table 7.4, follow instructions given below:

- Disconnect the electric vibrator and place it on a clean, level workbench.
- Follow the instructions on page 30, section 5.3, up to the removal of the V-ring grease seals from the flanges.
- Remove bearings (a) from flanges (b) by inserting two screws into the threaded pull holes; the axial alignment of the bearings (a) with the flanges (b) must be maintained during removal in order to prevent any damage (fig.74).
- Remove old grease from the bearings housings and wash them with a suitable solvent (fig.75).
- Insert the new bearings (a) into the flanges (b) using a hydraulic press (c); the axial alignment of the bearings (a) with the flanges (b) must be maintained during insertion in order to prevent any damage (fig.76).
- Proceed as instructed on page 30, section 5.3, with the replacement of new V-ring grease seals into the flanges.

- FIGURE - DRAWINGS -

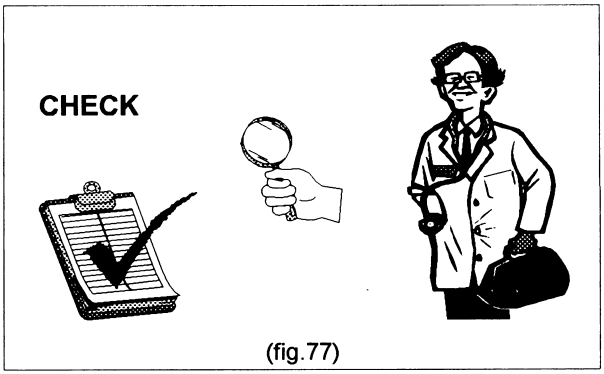

(fig.77)

5.5 PERIODIC INSPECTIONS

The electric vibrator should be inspected periodically to ensure good performance, reliability, and safety (fig.77).

5.6 SPARE PARTS REPLACEMENT

Always use genuine HVI (Visam) replacement parts. Substitution parts can compromise the performance and reliability of the vibrator, and will void the warranty.

For information on aquiring spare parts, please refer to section 6.

- FIGURE - DRAWINGS -

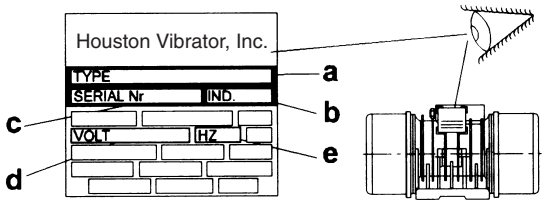

(fig.78)

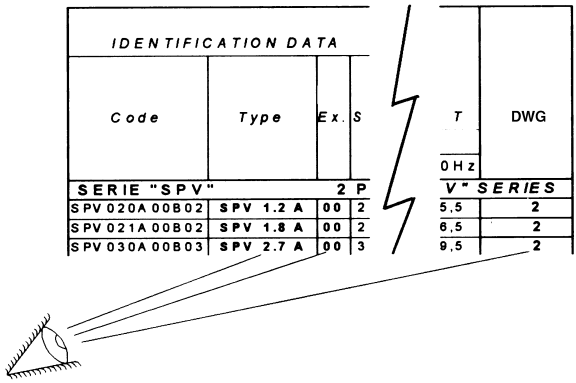

IDENTIFICATION DATA

Code	Type	Ex.	S	T 0 Hz	DWG
SERIE "SPV"			2 P	V" SERIES	
SPV 020A 00B02	SPV 1.2 A	00	2	5,5	2
SPV 021A 00B02	SPV 1.8 A	00	2	6,5	2
SPV 030A 00B03	SPV 2.7 A	00	3	9,5	2

(fig.79)

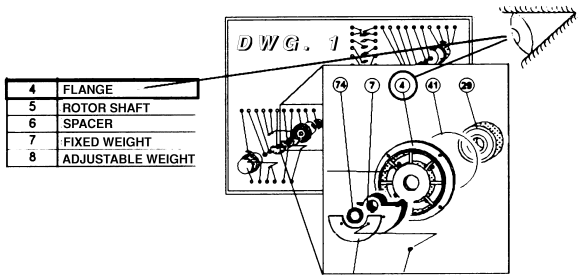

4	FLANGE
5	ROTOR SHAFT
6	SPACER
7	FIXED WEIGHT
8	ADJUSTABLE WEIGHT

(fig.80)

6 SPARE PARTS

When ordering spare parts, please be sure to provide HVI with all information listed in the example below:

type	SPV 6.7 B
execution	00
voltage	220/460
frequency	50 Hz
serial number	2530
spare part number	4
part description	flange
quantity needed	1

This information can be found following the steps below:

record the type (a), execution (b), serial number (c), voltage (d), and frequency (e), given on the nameplate of the vibrator (fig.78).

locate the type (model #) from the nameplate in table 7.2. Look under the “DWG” column to find the spare parts drawing for your particular vibrator (fig.79).

Find the exploded parts drawing and locate the part that you require. Record the number of the part, and its description from the parts list to the right of the drawing (fig. 80).

7 TECHNICAL DATA

7.1 WIRING DIAGRAMS

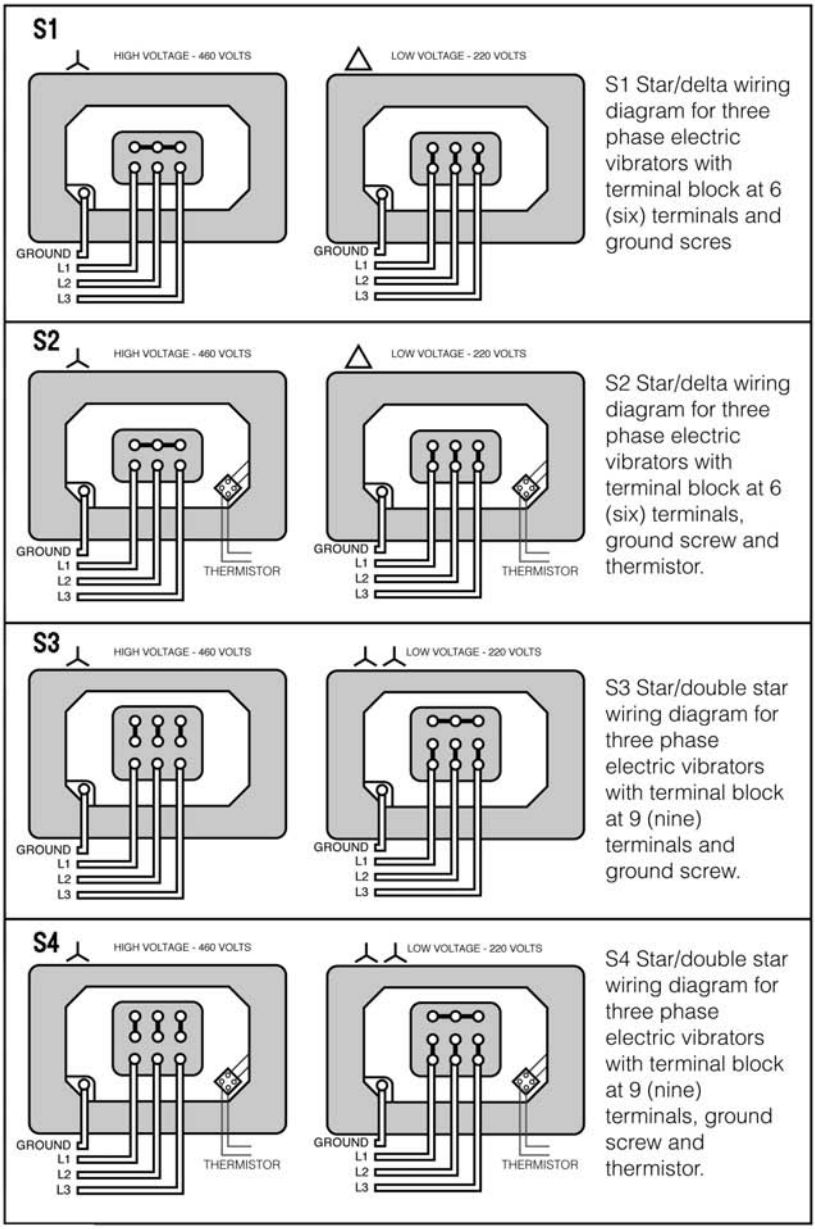

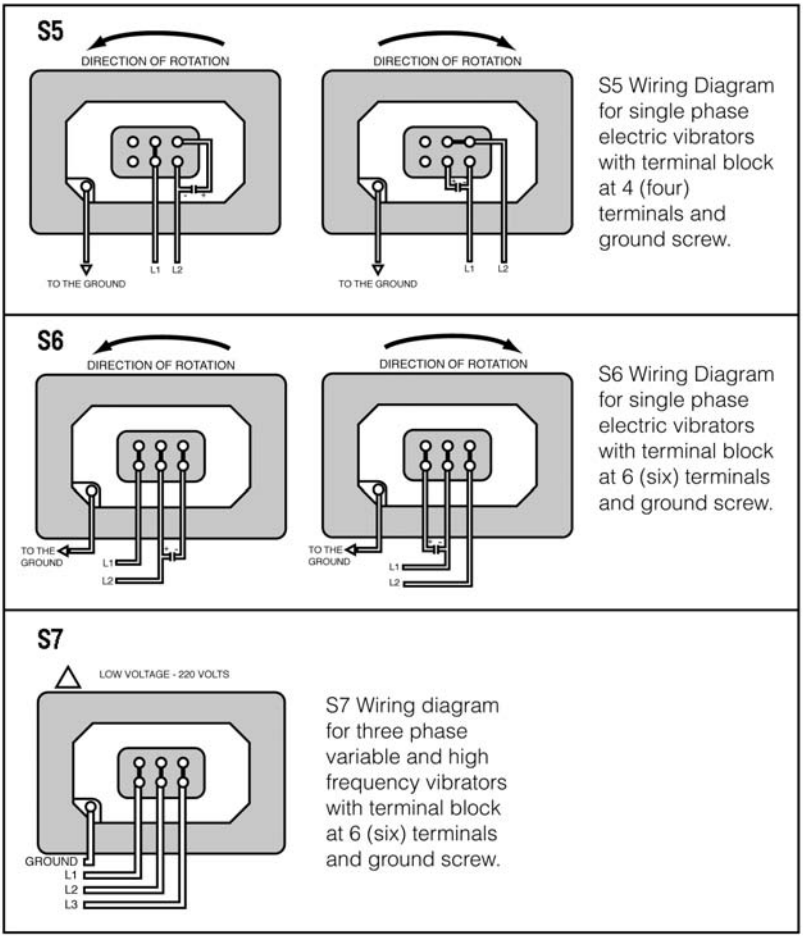
S5
DIRECTION OF ROTATION
DIRECTION OF ROTATION
L1
L2
TO THE GROUND
L1
L2
TO THE GROUND
S5 Wiring Diagram for single phase electric vibrators with terminal block at 4 (four) terminals and ground screw.
S6
DIRECTION OF ROTATION
DIRECTION OF ROTATION
TO THE GROUND
L1
L2
TO THE GROUND
L1
L2
S6 Wiring Diagram for single phase electric vibrators with terminal block at 6 (six) terminals and ground screw.
S7
LOW VOLTAGE - 220 VOLTS
GROUND
L1
L2
L3
S7 Wiring diagram for three phase variable and high frequency vibrators with terminal block at 6 (six) terminals and ground screw.

- SCHEMI - SKETCHES -

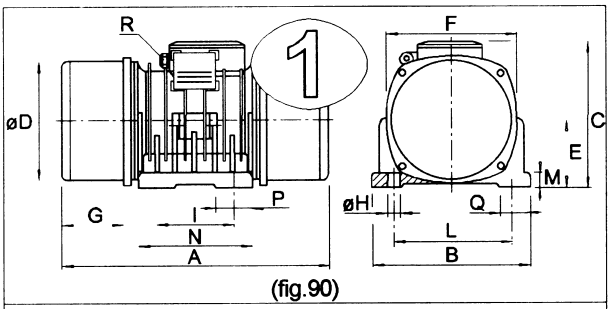

(fig.90)

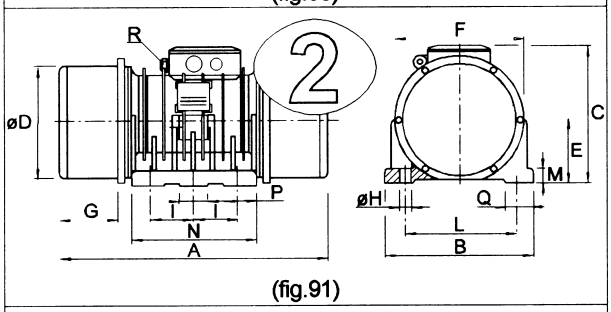

(fig.91)

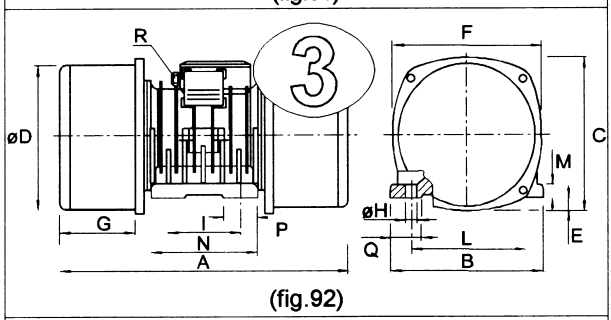

(fig.92)

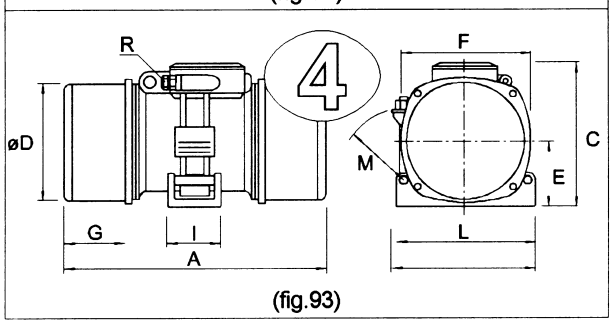

(fig.93)

7.2 ELECTRICAL & MECHANICAL FEATURES

Ref. 1 (fig.90)

Ref. 2 (fig.91)

Ref. 3 (fig.92)

Ref. 4 (fig.93)

7.2 ELECTRICAL & MECHANICAL FEATURES

IDENTIFICATION DATA			MECHANICAL FEATURES					ELECTRICAL FEATURES				
Type	EX	SZ	Stat. Moment [lbin]		Cent. Force [lb] F		K*	Max Power [KW]		Max Current [A]		Is/In
			50Hz	60Hz	50Hz	60Hz		50Hz	60Hz	400V 50Hz	460V 60Hz	
SPV SERIES					***2 POLE THREE PHASE***						***3000 RPM-50 Hz***	
SPV 1.2 A	00	2.0	1.0	0.9	266	320	0.88	0.18	0.20	0.4	0.4	3.6
SPV 1.8 A	00	2.1	1.7	1.2	444	447	0.88	0.19	0.21	0.4	0.4	3.6
SPV 2.7 A	00	3.0	2.6	1.7	655	629	0.88	0.27	0.30	0.6	0.6	3.5
SPV 4.5 A	00	4.0	4.3	3.4	1091	1257	0.88	0.51	0.60	1.0	1.0	3.8
SPV 7.0 A	00	5.0	6.8	5.1	1746	1886	0.88	0.70	0.73	1.2	1.1	4.2
SPV 9.0 A	01	6.0	8.7	5.8	2217	2128	0.88	1.06	1.20	1.8	1.8	3.8
SPV 12.0 A	01	6.1	11.6	7.2	2956	2660	0.88	1.30	1.40	2.1	2.0	3.7
SPV 15.0 A	00	7.0	15.9	11.6	4064	4256	0.88	1.55	1.60	2.4	2.3	4.5
SPV 19.0 A	00	8.0	19.8	16.3	5060	6008	0.88	2.00	2.10	3.1	3.0	4.3
SPV 25.0 A	00	9.0	24.3	20.0	6206	7368	0.88	2.40	2.50	3.8	3.5	4.1
SPV 32.0 A	00	10.0	35.0	28.9	8955	10633	0.88	4.00	4.20	6.3	6.0	4.2
SPV 50.0 A	00	11.0	47.8	33.3	12217	12266	0.88	5.50	5.80	8.6	7.9	4.2
SPV 60.0 A	00	12.0	58.9	39.0	15050	14334	0.88	7.00	7.30	11.2	10.2	4.2
SPV 70.0 A	00	12.9	67.2	47.7	17170	17561	0.88	8.40	8.60	13.5	12.0	4.5
SPV 85.0 A	00	13.0	82.5	55.8	21091	20559	0.88	9.00	9.50	14.8	13.5	4.5
SPC SERIES					***2 POLE THREE PHASE***						***3000 RPM-50 Hz***	
SPC 9.0 A	00	6.0	8.7	5.8	2217	2128	0.88	1.06	1.20	1.8	1.8	3.8
SPC 12.0 A	00	6.1	11.6	7.2	2956	2660	0.88	1.30	1.40	2.1	2.0	3.7
SPV SERIES					***4 POLE THREE PHASE***						***1500 RPM-50 Hz***	
SPV 0.5 B	00	2.0	1.7	1.4	111	128	0.90	0.08	0.09	0.2	0.2	4.0
SPV 0.8 B	00	2.1	3.1	2.4	200	224	0.90	0.09	0.10	0.2	0.2	4.0
SPV 2.2 B	00	3.0	8.5	6.0	546	550	0.90	0.20	0.22	0.5	0.4	2.5
SPV 3.8 B	00	4.0	15.1	10.4	964	959	0.90	0.35	0.42	0.7	0.7	3.3
SPV 5.1 B	00	4.1	20.6	15.1	1315	1388	0.90	0.43	0.50	0.8	0.8	3.5
SPV 6.7 B	00	5.0	25.9	17.2	1653	1587	0.90	0.55	0.63	0.9	0.9	2.6
SPV 10.0 B	01	6.0	38.9	26.7	2488	2460	0.90	0.80	0.88	1.3	1.3	2.8
SPV 15.0 B	00	7.0	58.4	43.2	3732	3978	0.90	1.00	1.13	1.7	1.6	3.2
SPV 20.0 B	00	8.0	78.3	51.3	5003	4720	0.90	1.30	1.36	2.1	2.1	4.0
SPV 25.5 B	00	9.0	100.6	74.5	6429	6853	0.90	1.75	1.85	3.2	3.2	5.0
SPV 35.0 B	00	10.0	136.3	100.9	8706	9280	0.90	2.25	2.58	3.8	3.9	4.8
SPV 47.5 B	00	11.0	182.5	135.1	11659	12428	0.90	3.25	3.55	5.3	5.2	5.0
SPV 55.0 B	00	12.0	199.7	150.1	12758	13807	0.90	4.50	5.00	7.4	7.0	4.2
SPV 63.0 B	00	12.9	242.8	170.3	15510	15667	0.90	6.10	6.25	10.0	9.6	4.0
SPV 77.0 B	00	13.0	293.6	205.1	18754	18873	0.90	7.10	7.30	11.9	11.0	4.3
SPV 83.0 B	00	14.0	330.7	232.0	21129	21344	0.90	7.80	8.40	12.4	12.0	4.4
SPV 105.0 B	01	14.1	427.1	310.6	27286	28576	0.90	10.70	11.10	17.6	17.0	5.0

OVERALL DIMENSIONS								MOUNTING DIMENSIONS								WT		DWG
REF	[in]							[in]							R [PG]			
	A	B	C	D	E	F	G	n°xH	I	L	M	N	P	Q		50Hz	60Hz	
3600 RPM-60 Hz								***2 POLE THREE PHASE***								***SPV SERIES***		
1	9.2	5.8	6.4	4.1	2.4	4.6	1.9	4X.35	2.3-3.0	4.2	0.6	4.7	1.4	1.2	16	13.2	12.1	1
1	9.2	5.8	6.4	4.1	2.4	4.6	1.9	4X.35	2.3-3.0	4.2	0.6	4.7	1.4	1.2	16	15.4	14.3	1
1	10.6	6.9	7.5	5.0	2.8	5.5	1.6	4X.51	3.5	4.9	0.7	5.8	1.7	1.5	16	22.0	20.9	1
1	12.0	7.5	8.1	5.9	3.4	6.5	2.0	4X.51	3.9	6.1	0.7	6.7	2.0	1.6	16	33.1	32.0	1
1	13.7	8.7	8.5	6.7	3.7	7.3	2.4	4X.67	4.5	6.7	0.8	7.5	2.3	1.9	16	46.3	44.1	2
1	14.8	8.9	9.3	7.5	4.1	8.0	2.7	4X.67	4.7	7.1	0.8	7.7	2.4	1.8	16	57.3	55.1	2
1	14.8	8.9	9.3	7.5	4.1	8.0	2.7	4X.67	4.7	7.1	0.8	7.7	2.4	1.8	16	61.7	58.4	2
1	16.3	9.8	9.7	8.0	4.4	8.5	3.2	4X.67	5.9	7.5	1.0	8.5	2.2	2.2	16	99.2	94.8	2
1	17.4	10.6	10.0	8.4	4.7	9.1	3.1	4X.67	6.3	7.9	1.2	9.3	2.7	2.6	16	116.8	113.5	2
1	22.0	11.0	10.8	9.5	5.2	10.2	4.4	4X.87	6.5	9.1	1.4	10.6	3.3	2.4	16	160.9	156.5	2
1	22.8	13.0	13.4	10.7	5.9	11.3	4.3	4X.98	6.5	10.6	1.6	11.5	3.7	2.5	21	235.9	232.6	3
1	24.5	14.0	14.4	12.2	6.5	12.8	4.6	4X1.10	8.3	11.6	1.6	12.4	3.7	2.6	21	337.3	332.9	3
2	26.1	15.4	15.6	13.7	7.6	15.8	4.9	6X1.10	4.3	12.2	1.7	13.2	3.8	3.4	21	394.6	385.8	3
2	27.3	15.4	16.8	13.7	8.0	15.8	4.9	6X1.10	4.5	12.6	1.8	14.0	3.9	2.8	21	496.0	489.4	3
2	28.3	15.4	16.8	13.7	8.0	15.8	4.9	6X1.10	4.5	12.6	1.8	14.0	3.9	2.8	21	544.6	535.8	4
3600 RPM-60 Hz								***2 POLE THREE PHASE***								***SPC SERIES***		
4	14.0	8.9	9.3	7.5	4.1	8.0	2.7	-	3.4	9.5	5.7	-	-	-	16	98.1	94.8	2
4	14.8	8.9	9.3	7.5	4.1	8.0	2.7	-	3.4	9.5	5.7	-	-	-	16	100.3	95.9	2
1800 RPM-60 Hz								***4 POLE THREE PHASE***								***SPV SERIES***		
1	9.2	5.8	6.4	4.1	2.4	4.6	1.9	4X.35	2.3-3.0	4.2	0.6	4.7	1.4	1.2	16	15.4	14.3	1
1	12.7	5.8	6.4	4.1	2.4	4.6	2.4	4X.35	2.3-3.0	4.2	0.6	4.7	1.4	1.2	16	18.7	17.6	1
1	12.8	6.9	7.5	5.0	2.8	5.5	2.7	4X.51	3.5	4.9	0.7	5.8	1.7	1.5	16	28.7	26.5	1
1	15.0	7.5	8.1	5.9	3.4	6.5	3.5	4X.51	3.9	6.1	0.7	6.7	2.0	1.6	16	44.1	39.7	1
1	16.4	7.5	8.1	5.9	3.4	6.5	4.2	4X.51	3.9	6.1	0.7	6.7	2.0	1.6	16	50.7	45.2	2
1	15.7	8.7	8.5	6.7	3.7	7.3	3.4	4X.67	4.5	6.7	0.8	7.5	2.3	1.9	16	58.4	51.8	2
1	17.3	8.9	9.3	7.5	4.1	8.0	3.9	4X.67	4.7	7.1	0.8	7.7	2.4	1.8	16	80.5	71.7	2
1	18.6	9.8	9.7	8.0	4.4	8.5	4.3	4X.67	5.9	7.5	1.0	8.5	2.2	2.2	16	124.6	116.8	2
1	20.4	10.6	10.0	8.4	4.7	9.1	4.6	4X.67	6.3	7.9	1.2	9.3	2.7	2.6	16	149.9	132.3	2
1	22.0	11.0	10.8	9.5	5.2	10.2	4.4	4X.87	6.5	9.1	1.4	10.6	3.3	2.4	16	198.4	183.0	2
1	22.8	13.0	13.4	10.7	5.9	11.3	4.3	4X.98	6.5	10.6	1.6	11.5	3.7	2.5	21	278.9	261.2	3
1	24.5	14.0	14.4	12.2	6.5	12.8	4.6	4X1.10	8.3	11.6	1.6	12.4	3.7	2.6	21	366.0	354.9	3
2	26.1	15.4	15.6	13.7	7.6	15.8	4.9	6X1.10	4.3	12.2	1.7	13.2	3.8	3.4	21	436.5	423.3	3
2	27.3	15.4	16.8	13.7	8.0	15.8	4.9	6X1.10	4.5	12.6	1.8	14.0	3.9	2.8	21	533.5	504.9	3
2	28.3	15.4	16.8	13.7	8.0	15.8	4.9	6X1.10	4.5	12.6	1.8	14.0	3.9	2.8	21	584.2	553.4	4
2	28.8	18.0	17.8	16.1	8.9	18.3	4.6	6X1.26	5.1	15.0	2.0	15.2	4.9	3.9	21	692.3	657.0	4
2	29.1	18.0	17.8	16.1	8.9	18.3	4.6	6X1.26	5.1	15.0	2.0	15.2	4.9	3.9	21	731.9	692.3	4

7.2 ELECTRICAL & MECHANICAL FEATURES

IDENTIFICATION DATA			MECHANICAL FEATURES					ELECTRICAL FEATURES				
Type	EX	SZ	Stat. Moment [lbin]		Cent. Force [lb] F		K*	Max Power [KW]		Max Current [A]		Is/In
			50Hz	60Hz	50Hz	60Hz		50Hz	60Hz	400V 50Hz	460V 60Hz	
SPV SERIES				***6 POLE THREE PHASE***							***1000 RPM-50 Hz***	
SPV 1.1 C	00	3.0	10.3	8.5	291	349	0.92	0.16	0.17	0.4	0.5	2.6
SPV 1.7 C	00	4.0	15.1	15.1	428	617	0.92	0.24	0.26	0.6	0.6	3.1
SPV 2.2 C	00	4.1	20.6	20.6	584	841	0.92	0.27	0.30	0.7	0.7	3.3
SPV 3.8 C	00	5.0	34.5	25.5	979	1058	0.92	0.40	0.44	0.9	0.9	2.8
SPV 5.0 C	01	6.0	44.8	38.9	1271	1592	0.92	0.60	0.65	1.1	1.1	3.1
SPV 8.0 C	00	7.0	73.6	58.4	2090	2389	0.92	0.74	0.78	1.5	1.4	3.4
SPV 12.0 C	01	8.0	105.3	78.3	2990	3202	0.92	0.87	0.90	1.7	1.5	4.0
SPV 17.0 C	00	9.0	152.9	100.6	4341	4114	0.92	1.30	1.45	2.4	2.4	4.3
SPV 27.0 C	00	10.0	237.8	184.6	6753	7546	0.92	2.10	2.28	4.1	4.0	5.3
SPV 35.5 C	00	11.0	308.2	226.0	8752	9242	0.92	2.70	3.00	5.8	5.5	5.2
SPV 41.5 C	00	11.1	366.9	255.4	10419	10442	0.92	3.00	3.30	6.2	5.8	5.4
SPV 50.0 C	00	12.0	444.2	319.7	12613	13070	0.92	4.00	4.20	7.1	6.8	4.8
SPV 61.0 C	00	12.9	525.0	359.6	14906	14704	0.92	5.30	6.20	9.4	10.1	5.0
SPV 80.0 C	00	13.0	686.2	480.8	19485	19657	0.92	7.60	8.20	13.1	13.0	4.9
SPV 90.5 C	00	14.0	792.8	543.1	22512	22207	0.92	8.00	8.60	13.4	13.8	5.0
SPV 114.0 C	00	14.1	990.8	653.8	28133	26732	0.92	9.80	10.80	16.6	16.9	5.4
SPV 122.0 C	01	14.2	1058.2	721.2	30047	29488	0.92	10.20	11.00	17.1	17.5	5.6
SPV 140.0 C	00	15.0	1195.7	846.4	33941	34605	0.92	13.50	14.30	23.2	21.1	5.3
SPV 160.0 C	00	15.1	1373.9	936.3	39009	38284	0.92	15.20	16.00	26.4	25.1	5.1
SPV 190.0 C	00	16.0	1628.2	1406.7	46231	57515	0.92	17.30	18.00	30.5	26.5	5.6
SPV SERIES				***8 POLE THREE PHASE***							***750 RPM-50 Hz***	
SPV 1.3 D	00	4.1	20.6	21.6	329	473	0.94	0.17	0.20	0.5	0.5	3.3
SPV 2.1 D	00	5.0	34.5	34.5	551	793	0.94	0.28	0.33	0.7	0.7	2.8
SPV 2.8 D	01	6.0	44.8	44.8	715	1029	0.94	0.43	0.46	1.1	1.1	3.1
SPV 4.5 D	00	7.0	73.6	73.6	1175	1693	0.94	0.48	0.52	1.3	1.3	3.4
SPV 7.0 D	01	8.0	105.3	105.3	1682	2422	0.94	0.55	0.60	1.4	1.4	4.0
SPV 10.0 D	00	9.0	152.9	152.9	2442	3517	0.94	1.10	1.25	2.3	2.3	4.3
SPV 15.5 D	00	10.0	237.8	237.8	3799	5470	0.94	1.70	1.90	3.9	4.3	4.0
SPV 20.0 D	00	11.0	308.2	308.2	4923	7089	0.94	2.20	2.45	5.0	5.2	5.2
SPV 23.5 D	00	11.1	366.9	366.9	5860	8439	0.94	2.40	2.50	5.5	5.2	5.5
SPV 28.0 D	00	12.0	527.2	444.2	8421	10216	0.94	3.00	3.50	6.7	7.0	4.0
SPV 42.5 D	00	12.9	649.0	525.0	10365	12074	0.94	5.20	5.80	10.0	10.3	5.3
SPV 56.0 D	00	13.0	850.6	686.2	13585	15783	0.94	6.20	7.20	11.9	11.6	4.9
SPV 66.5 D	00	14.0	1042.5	792.8	16651	18234	0.94	7.00	8.00	13.1	12.6	5.3
SPV 78.5 D	01	14.1	1193.0	1058.2	19055	24338	0.94	7.30	8.50	13.9	13.3	5.2
SPV 100.0 D	00	15.0	1544.4	1369.9	24666	31505	0.94	8.80	9.50	16.9	16.8	5.6
SPV 124.0 D	00	15.1	1898.9	1723.9	30328	39648	0.94	11.00	12.00	23.0	22.8	6.0
SPV 142.0 D	00	16.0	2182.0	1849.7	34850	42542	0.94	13.10	13.80	27.8	27.1	5.3
SPV 164.0 D	00	16.1	2514.3	2071.3	40157	47637	0.94	14.00	14.50	29.7	28.4	5.3

OVERALL DIMENSIONS								MOUNTING DIMENSIONS								WT		DWG
REF	[in]							[in]							R [PG]			
	A	B	C	D	E	F	G	n°xH	I	L	M	N	P	Q		50Hz	60Hz	
1200 RPM-60 Hz								***6 POLE THREE PHASE***								***SPV SERIES***		
1	14.1	6.9	7.5	5.0	2.8	5.5	3.3	4X.51	3.5	4.9	0.7	5.8	1.7	1.5	16	30.9	29.8	1
1	15.0	7.5	8.1	5.9	3.4	6.5	3.5	4X.51	3.9	6.1	0.7	6.7	2.0	1.6	16	44.1	44.1	1
1	16.4	7.5	8.1	5.9	3.4	6.5	4.2	4x.51	3.9	6.1	0.7	6.7	2.0	1.6	16	49.6	49.6	1
1	17.2	8.7	8.5	6.7	3.7	7.3	4.1	4X.67	4.5	6.7	0.8	7.5	2.3	1.9	16	63.9	57.3	2
1	18.3	8.9	9.3	7.5	4.1	8.0	4.4	4X.67	4.7	7.1	0.8	7.7	2.4	1.8	16	87.1	82.7	2
1	20.0	9.8	9.7	8.0	4.4	8.5	5.0	4X.67	5.9	7.5	1.0	8.5	2.2	2.2	16	132.3	122.4	2
1	23.0	10.6	10.0	8.4	4.7	9.1	5.9	4X.67	6.3	7.9	1.2	9.3	2.7	2.6	16	169.8	152.1	2
1	24.8	11.0	10.8	9.5	5.2	10.2	5.8	4X.87	6.5	9.1	1.4	10.6	3.3	2.4	16	232.6	202.8	2
1	26.5	13.0	13.4	10.7	5.9	11.3	6.2	4X.98	6.5	10.6	1.6	11.5	3.7	2.5	21	332.9	304.2	3
1	27.8	14.0	14.4	12.2	6.5	12.8	6.2	4X1.10	8.3	11.6	1.6	12.4	3.7	2.6	21	416.7	381.4	3
1	27.8	14.0	14.4	12.2	6.5	12.8	6.2	4x1.10	8.3	11.6	1.6	12.4	3.7	2.6	21	454.2	407.9	3
2	29.3	15.4	15.6	13.7	7.6	15.8	6.5	6X1.10	4.3	12.2	1.7	13.2	3.8	3.4	21	520.3	476.2	3
2	30.5	15.4	16.8	13.7	8.0	15.8	6.5	6X1.10	4.5	12.6	1.8	14.0	3.9	2.8	21	648.2	586.4	3
2	34.6	15.4	16.8	13.7	8.0	15.8	8.0	6X1.10	4.5	12.6	1.8	14.0	3.9	2.8	21	749.6	672.4	4
2	35.7	18.0	17.8	16.1	8.9	18.3	8.1	6x1.26	5.1	15.0	2.0	15.2	4.9	3.9	21	848.8	767.2	4
2	38.7	18.0	17.8	16.1	8.9	18.3	9.4	6x1.26	5.1	15.0	2.0	15.2	4.9	3.9	21	925.9	815.7	4
2	38.7	18.0	17.8	16.1	8.9	18.3	9.4	6x1.26	5.1	15.0	2.0	15.2	4.9	3.9	21	952.4	844.4	4
2	36.2	19.7	19.1	17.7	9.7	19.7	7.5	6x1.50	6.1	15.8	2.0	18.1	5.7	3.9	29	1168.4	1069.2	4
2	40.9	19.7	19.1	17.7	9.7	19.7	8.5	6x1.50	6.1	15.8	2.0	18.1	5.7	3.9	29	1278.7	1150.8	4
2	40.2	21.3	21.0	19.5	10.4	21.3	8.1	6x1.50	7.0	17.3	2.0	19.7	6.5	4.5	29	1433.0	1366.9	4
900 RPM-60 Hz								***8 POLE THREE PHASE***								***SPV SERIES***		
1	16.4	7.5	8.1	5.9	3.4	6.5	4.2	4X.51	3.9	6.1	0.7	6.7	2.0	1.6	16	49.6	49.6	1
1	17.2	8.7	8.5	6.7	3.7	7.3	4.1	4X.67	4.5	6.7	0.8	7.5	2.3	1.9	16	63.9	63.9	2
1	18.3	8.9	9.3	7.5	4.1	8.0	4.4	4X.67	4.7	7.1	0.8	7.7	2.4	1.8	16	87.1	87.1	2
1	20.0	9.8	9.7	8.0	4.4	8.5	5.0	4X.67	5.9	7.5	1.0	8.5	2.2	2.2	16	132.3	132.3	2
1	23.0	10.6	10.0	8.4	4.7	9.1	5.9	4X.67	6.3	7.9	1.2	9.3	2.7	2.6	16	169.8	169.8	2
1	24.8	11.0	10.8	9.5	5.2	10.2	5.8	4X.87	6.5	9.1	1.4	10.6	3.3	2.4	16	232.6	232.6	2
1	26.5	13.0	13.4	10.7	5.9	11.3	6.2	4X.98	6.5	10.6	1.6	11.5	3.7	2.5	21	332.9	332.9	3
1	27.8	14.0	14.4	12.2	6.5	12.8	6.2	4X1.10	8.3	11.6	1.6	12.4	3.7	2.6	21	416.7	416.7	3
1	27.8	14.0	14.4	12.2	6.5	12.8	6.2	4X1.10	8.3	11.6	1.6	12.4	3.7	2.6	21	454.2	454.2	3
2	32.4	15.4	15.6	13.7	7.6	15.8	8.0	6X1.10	4.3	12.2	1.7	13.2	3.8	3.4	21	566.6	535.7	3
2	33.6	15.4	16.8	13.7	8.0	15.8	8.0	6X1.10	4.5	12.6	1.8	14.0	3.9	2.8	21	661.4	617.3	3
2	37.8	15.4	16.8	13.7	8.0	15.8	9.6	6X1.10	4.5	12.6	1.8	14.0	3.9	2.8	21	822.3	760.6	4
2	38.4	18.0	17.8	16.1	8.9	18.3	9.4	6X1.26	5.1	15.0	2.0	15.2	4.9	3.9	21	948.0	864.2	4
2	38.7	18.0	17.8	16.1	8.9	18.3	9.4	6x1.26	5.1	15.0	2.0	15.2	4.9	3.9	21	992.1	948.0	4
2	39.8	19.7	19.1	17.7	9.7	19.7	9.3	6x1.50	6.1	15.8	2.0	18.1	5.7	3.9	29	1289.7	1234.6	4
2	44.9	19.7	19.1	17.7	9.7	19.7	10.4	6x1.50	6.1	15.8	2.0	18.1	5.7	3.9	29	1466.1	1411.0	4
2	43.3	21.3	21.0	19.5	10.4	21.3	9.6	6x1.50	7.0	17.3	2.0	19.7	6.5	4.5	29	1631.4	1532.2	4
2	46.1	21.3	21.0	19.5	10.4	21.3	11.0	6x1.50	7.0	17.3	2.0	19.7	6.5	4.5	29	1741.7	1609.4	4

7.2 ELECTRICAL & MECHANICAL FEATURES

IDENTIFICATION DATA			MECHANICAL FEATURES					ELECTRICAL FEATURES				
Type	EX	SZ	Stat. Moment [lbin]		Cent. Force [lb] F		K*	Max Power [KW]		Max Current [A]		Is/In
			50Hz	60Hz	50Hz	60Hz		50Hz	60Hz	400V 50Hz	460V 60Hz	
SPV SERIES					***10 POLE THREE PHASE***						***600 RPM-50 Hz***	
SPV 1.7 E	01	6.0	44.8	44.8	457	659	0.94	0.32	0.34	0.8	0.7	2.2
SPV 3.7 E/P	01	6.5	102.3	102.3	1046	1506	0.94	0.32	0.34	0.8	0.7	2.1
SPV 2.7 E	00	7.0	73.6	73.6	752	1083	0.94	0.40	0.42	0.9	0.9	2.3
SPV 4.5 E/P	00	7.5	119.6	119.6	1223	1761	0.94	0.40	0.42	0.9	0.9	3.2
SPV 4.0 E	01	8.0	105.3	105.3	1076	1550	0.94	0.48	0.52	1.2	1.2	3.5
SPV 6.5 E	00	9.0	152.9	152.9	1563	2251	0.94	0.67	0.72	1.6	1.5	4.2
SPV SERIES					***12 POLE THREE PHASE***						***500 RPM-50 Hz***	
SPV 1.2 F	01	6.0	44.8	44.8	318	457	0.94	0.30	0.33	0.8	0.7	2.3
SPV 2.5 F/P	01	6.5	102.3	102.3	726	1046	0.94	0.33	0.35	1.0	0.9	2.1
SPV 1.9 F	00	7.0	73.6	73.6	552	752	0.94	0.38	0.40	0.9	0.9	2.2
SPV 3.0 F/P	00	7.5	119.6	119.6	849	1223	0.94	0.38	0.40	0.9	0.9	3.0
SPV 2.6 F	01	8.0	105.3	106.3	748	1076	0.94	0.45	0.48	1.1	1.1	3.3
SPV 4.3 F	00	9.0	152.9	152.9	1085	1563	0.94	0.64	0.68	1.4	1.4	4.3
SPV SERIES					***2 POLE SINGLE PHASE***						***3000 RPM-50 Hz***	
SPV 1.2 AM	00	2.0	1.0	0.9	266	320	0.86	0.17	0.18	0.8	1.6	2.5
SPV 1.8 AM	00	2.1	1.7	1.2	444	447	0.86	0.18	0.19	0.9	1.7	2.5
SPV 2.7 AM	00	3.0	2.6	1.7	655	629	0.86	0.30	0.33	1.4	2.9	2.4
SPV 4.5 AM	00	4.0	4.3	3.4	1091	1257	0.86	0.50	0.75	2.7	7.4	2.2
SPV 7.0 AM	00	5.0	6.8	5.1	1746	1886	0.86	0.75	1.00	3.7	9.2	2.4
SPV 9.0 AM	01	6.0	8.7	5.8	2217	2128	0.86	1.00	1.10	4.8	10.0	3.2
SPV 12.0 AM	01	6.1	11.6	7.2	2956	2660	0.86	1.25	1.30	5.9	12.0	3.8

OVERALL DIMENSIONS								MOUNTING DIMENSIONS									WT		DWG
REF	[in]							[in]								R [PG]	50Hz	60Hz	
	A	B	C	D	E	F	G	n°xH	I	L	M	N	P	Q	S				
720 RPM-60 Hz								***10 POLE THREE PHASE***									***SPV SERIES***		
1	18.3	8.9	9.3	7.5	4.1	8.0	4.4	4X.67	4.7	7.1	0.8	7.7	2.4	1.8	-	16	87.1	87.1	2
3	18.3	8.9	10.2	9.4	4.1	10.2	4.4	4X.67	4.7	7.1	0.8	7.7	2.4	1.8	0.4	16	114.6	114.6	2
1	20.0	9.8	9.7	8.0	4.4	8.5	5.0	4X.67	5.9	7.5	1.0	8.5	2.2	2.2	-	16	112.4	112.4	2
3	18.6	9.8	11.3	10.7	4.4	11.3	4.3	4X.67	5.9	7.5	1.0	8.5	2.2	2.2	1.3	16	123.5	123.5	2
1	23.0	10.6	10.0	8.4	4.7	9.1	5.9	4X.67	6.3	7.9	1.2	9.3	2.7	2.6	-	16	169.8	169.8	2
1	24.8	11.0	10.8	9.5	5.2	10.2	5.8	4X.87	6.5	9.1	1.4	10.6	3.3	2.4	-	16	232.6	232.6	2
600 RPM-60 Hz								***12 POLE THREE PHASE***									***SPV SERIES***		
1	18.3	8.9	9.3	7.5	4.1	8.0	4.4	4X.67	4.7	7.1	0.8	7.7	2.4	1.8	-	16	87.1	87.1	2
3	18.3	8.9	10.2	9.4	4.1	10.2	4.4	4X.67	4.7	7.1	0.8	7.7	2.4	1.8	0.4	16	114.6	114.6	2
1	20.0	9.8	9.7	8.0	4.4	8.5	5.0	4X.67	5.9	7.5	1.0	8.5	2.2	2.2	-	16	112.4	112.4	2
3	18.6	9.8	11.3	10.7	4.4	11.3	4.3	4X.67	5.9	7.5	1.0	8.5	2.2	2.2	1.3	16	123.5	123.5	2
1	23.0	10.6	10.0	8.4	4.7	9.1	5.9	4X.67	6.3	7.9	1.2	9.3	2.7	2.6	-	16	169.8	169.8	2
1	24.8	11.0	10.8	9.5	5.2	10.2	5.8	4X.87	6.5	9.1	1.4	10.6	3.3	2.4	-	16	232.6	232.6	2
3600 RPM-60 Hz								***2 POLE SINGLE PHASE***									***SPV SERIES***		
1	9.2	5.8	6.4	4.1	2.4	4.6	1.9	4X.35	2.3-3.0	4.2	0.6	4.7	1.4	1.2	-	16	13.2	12.1	1
1	9.2	5.8	6.4	4.1	2.4	4.6	1.9	4X.35	2.3-3.0	4.2	0.6	4.7	1.4	1.2	-	16	15.4	14.3	1
1	10.6	6.9	7.5	5.0	2.8	5.5	1.6	4X.51	3.5	4.9	0.7	5.8	1.7	1.5	-	16	22.0	20.9	1
1	12.0	7.5	8.1	5.9	3.4	6.5	2.0	4X.51	3.9	6.1	0.7	6.7	2.0	1.6	-	16	33.1	32.0	1
1	13.7	8.7	8.5	6.7	3.7	7.3	2.4	4X.67	4.5	6.7	0.8	7.5	2.3	1.9	-	16	43.0	40.8	2
1	14.8	8.9	9.3	7.5	4.1	8.0	2.7	4X.67	4.7	7.1	0.8	7.7	2.4	1.8	-	16	57.3	55.1	2
1	14.8	8.9	9.3	7.5	4.1	8.0	2.7	4X.67	4.7	7.1	0.8	7.7	2.4	1.8	-	16	26.5	58.4	2

7.3 MOUNTING & WIRING DATA

IDENTIFICATION DATA			MOUNTING DATA				
Type	EX	SZ	Mounting System	Bolt Quantity	Bolt Type	Bolt Class	Tightening Torque [Foot Lbs]
SPV SERIES			***2 POLE THREE PHASE***				***3000 RPM-50 Hz***
SPV 1.2 A	00	2.0	Foot Mount	4	M9	5	21.7
SPV 1.8 A	00	2.1	Foot Mount	4	M9	5	21.7
SPV 2.7 A	00	3.0	Foot Mount	4	M12	5	65.1
SPV 4.5 A	00	4.0	Foot Mount	4	M12	5	65.1
SPV 7.0 A	00	5.0	Foot Mount	4	M16	5	144.5
SPV 9.0 A	01	6.0	Foot Mount	4	M16	5	144.5
SPV 12.0 A	01	6.1	Foot Mount	4	M16	5	144.5
SPV 15.0 A	00	7.0	Foot Mount	4	M16	5	144.5
SPV 19.0 A	00	8.0	Foot Mount	4	M16	5	144.5
SPV 25.0 A	00	9.0	Foot Mount	4	M20	5	289.3
SPV 32.0 A	00	10.0	Foot Mount	4	M24	5	506.9
SPV 50.0 A	00	11.0	Foot Miount	4	M27	5	650.9
SPV 60.0 A	00	12.0	Foot Mount	6	M27	5	650.9
SPV 70.0 A	00	12.9	Foot Mount	6	M27	5	650.9
SPV 85.0 A	00	13.0	Foot Mount	6	M27	5	650.9
SPC SERIES			***2 POLE THREE PHASE***				***3000 RPM-50 Hz***
SPC 9.0 A	00	6.0	Cradle	-	-	-	7236.8
SPC 12.0 A	00	6.1	Cradle	-	-	-	9697.2
SPV SERIES			***4 POLE THREE PHASE***				***1500 RPM-50 Hz***
SPV 0.5 B	00	2.0	Foot Mount	4	M9	5	21.7
SPV 0.8 B	00	2.1	Foot Mount	4	M9	5	21.7
SPV 2.2 B	00	3.0	Foot Mount	4	M12	5	65.1
SPV 3.8 B	00	4.0	Foot Mount	4	M12	5	65.1
SPV 5.1 B	00	4.1	Foot Mount	4	M12	5	65.1
SPV 6.7 B	00	5.0	Foot Mount	4	M16	5	144.5
SPV 10.0 B	01	6.0	Foot Mount	4	M16	5	144.5
SPV 15.0 B	00	7.0	Foot Mount	4	M16	5	144.5
SPV 20.0 B	00	8.0	Foot Mount	4	M16	5	144.5
SPV 25.5 B	00	9.0	Foot Mount	4	M20	5	289.3
SPV 35.0 B	00	10.0	Foot Mount	4	M24	5	506.3
SPV 47.5 B	00	11.0	Foot Mount	4	M27	5	650.9
SPV 55.0 B	00	12.0	Foot Mount	6	M27	5	650.9
SPV 63.0 B	00	12.9	Foot Mount	6	M27	5	650.9
SPV 77.0 B	00	13.0	Foot Mount	6	M27	5	650.9
SPV 83.0 B	00	14.0	Foot Mount	6	M30	5	954.8
SPV 105.0 B	01	14.1	Foot Mount	6	M30	5	954.8

WIRING DATA						WT		DWG
Cable Grip	Feeding Cable Diameter [in]	Feeding Condusctor Guage	Min. Bending Radius [in]	Capacitor				
				50Hz	60Hz	50Hz	60Hz	
3600 RPM-60 Hz		***2 POLE THREE PHASE***				***SPV SERIES***		
PG 16	0.35 - 0.45	14	4.92	-	-	13.2	12.1	1
PG 16	0.35 - 0.45	14	4.92	-	-	15.4	14.3	1
PG 16	0.35 - 0.45	14	4.92	-	-	22.0	20.9	1
PG 16	0.35 - 0.45	14	4.92	-	-	33.1	32.0	1
PG 16	0.35 - 0.45	14	4.92	-	-	46.3	44.1	2
PG 16	0.50 - 0.60	12	5.90	-	-	57.3	55.1	2
PG 16	0.50 - 0.60	12	5.90	-	-	61.7	58.4	2
PG 16	0.50 - 0.60	12	5.90	-	-	99.2	94.8	2
PG 16	0.50 - 0.60	12	5.90	-	-	116.8	113.5	2
PG 16	0.50 - 0.60	12	5.90	-	-	160.9	156.5	2
PG 21	0.63 - 0.75	12	6.89	-	-	235.9	232.6	3
PG 21	0.63 - 0.75	12	6.89	-	-	337.3	332.9	3
PG 21	0.63 - 0.75	12	6.89	-	-	394.6	385.8	3
PG 21	0.63 - 0.75	10	6.89	-	-	496.0	489.4	3
PG 21	0.63 - 0.75	10	6.89	-	-	544.6	535.8	4
3600 RPM-60 Hz		***2 POLE THREE PHASE***				***SPC SERIES***		
PG 16	0.50 - 0.60	10	6.89	-	-	98.1	94.8	2
PG 16	0.50 - 0.60	10	6.89	-	-	100.3	95.9	2
1800 RPM-60 Hz		***4 POLE THREE PHASE***				***SPV SERIES***		
PG 16	0.35 - 0.45	14	4.92	-	-	15.4	14.3	1
PG 16	0.35 - 0.45	14	4.92	-	-	18.7	17.6	1
PG 16	0.35 - 0.45	14	4.92	-	-	28.7	26.5	1
PG 16	0.35 - 0.45	14	4.92	-	-	44.1	39.7	1
PG 16	0.35 - 0.45	14	4.92	-	-	50.7	45.2	2
PG 16	0.35 - 0.45	14	4.92	-	-	58.4	51.8	2
PG 16	0.50 - 0.60	12	5.90	-	-	80.5	71.7	2
PG 16	0.50 - 0.60	12	5.90	-	-	124.6	116.8	2
PG 16	0.50 - 0.60	12	5.90	-	-	149.9	132.3	2
PG 16	0.50 - 0.60	12	5.90	-	-	198.4	183.0	2
PG 21	0.63 - 0.75	12	6.89	-	-	278.9	261.2	3
PG 21	0.63 - 0.75	12	6.89	-	-	366.0	354.9	3
PG 21	0.63 - 0.75	12	6.89	-	-	436.5	423.3	3
PG 21	0.63 - 0.75	10	6.89	-	-	533.5	504.9	3
PG 21	0.63 - 0.75	10	6.89	-	-	584.2	553.4	4
PG 21	0.63 - 0.75	10	6.89	-	-	692.3	657.0	4
PG 21	0.63 - 0.75	10	6.89	-	-	731.9	692.3	4

7.3 MOUNTING & WIRING DATA

IDENTIFICATION DATA			MOUNTING DATA				
Type	EX	SZ	Mounting System	Bolt Quantity	Bolt Type	Bolt Class	Tightening Torque [Foot Lbs]
SPV SERIES			***6 POLE THREE PHASE***				***1000 RPM-50 Hz***
SPV 1.1 C	00	3.0	Foot Mount	4	M12	5	97.37
SPV 1.7 C	00	4.0	Foot Mount	4	M12	5	143.34
SPV 2.2 C	00	4.1	Foot Mount	4	M12	5	195.47
SPV 3.8 C	00	5.0	Foot Mount	4	M16	5	327.65
SPV 5.0 C	01	6.0	Foot Mount	4	M16	5	425.11
SPV 8.0 C	00	7.0	Foot Mount	4	M16	5	699.05
SPV 12.0 C	01	8.0	Foot Mount	4	M16	5	1000.37
SPV 17.0 C	00	9.0	Foot Mount	4	M20	5	1452.43
SPV 27.0 C	00	10.0	Foot Mount	4	M24	5	2259.27
SPV 35.5 C	00	11.0	Foot Mount	4	M27	5	2927.86
SPV 41.5 C	00	11.1	Foot Mount	4	M27	5	3485.55
SPV 50.0 C	00	12.0	Foot Miount	6	M27	5	4219.58
SPV 61.0 C	00	12.9	Foot Mount	6	M27	5	4986.78
SPV 80.0 C	00	13.0	Foot Mount	6	M27	5	6518.63
SPV 90.5 C	00	14.0	Foot Mount	6	M30	5	7531.26
SPV 114.0 C	01	14.1	Foot Mount	6	M30	5	9412.08
SPV 122.0 C	01	14.2	Foot Mount	6	M30	5	10052.36
SPV 140.0 C	00	15.0	Foot Mount	6	M36	5	11354.94
SPV 160.0 C	00	15.1	Foot Mount	6	M36	5	13050.59
SPV 190.0 C	00	16.0	Foot Mount	6	M36	5	15466.56
SPV SERIES			***8 POLE THREE PHASE***				***750 RPM-50 Hz***
SPV 1.3 D	00	4.1	Foot Mount	4	M12	5	109.96
SPV 2.1 D	00	5.0	Foot Mount	4	M16	5	184.30
SPV 2.8 D	01	6.0	Foot Mount	4	M16	5	239.12
SPV 4.5 D	00	7.0	Foot Mount	4	M16	5	393.22
SPV 7.0 D	01	8.0	Foot Mount	4	M16	5	562.71
SPV 10.0 D	00	9.0	Foot Mount	4	M20	5	816.99
SPV 15.5 D	00	10.0	Foot Mount	4	M24	5	1270.84
SPV 20.0 D	00	11.0	Foot Mount	4	M27	5	1646.92
SPV 23.5 D	00	11.1	Foot Mount	4	M27	5	1960.62
SPV 28.0 D	00	12.0	Foot Mount	6	M27	5	2817.16
SPV 42.5 D	00	12.9	Foot Mount	6	M27	5	3467.67
SPV 56.0 D	00	13.0	Foot Mount	6	M27	5	4544.99
SPV 66.5 D	00	14.0	Foot Mount	6	M30	5	5570.61
SPV 78.5 D	01	14.1	Foot Mount	6	M30	5	6374.76
SPV 100.0 D	00	15.0	Foot Mount	6	M36	5	8252.01
SPV 124.0 D	00	15.1	Foot Mount	6	M36	5	10146.42
SPV 142.0 D	00	16.0	Foot Mount	6	M36	5	11659.11
SPV 164.0 D	00	16.1	Foot Mount	6	M36	5	11659.11

WIRING DATA						WT [Lbs]		DWG
Cable Grip	Feeding Cable Diameter [in]	Feeding Conductor Guage	Min. Bending Radius [in]	Capacitor [μF] 50Hz	Capacitor [μF] 60Hz	50Hz	60Hz	
1200 RPM-60 Hz		***6 POLE THREE PHASE***				***SPV SERIES***		
PG 16	0.35 - 0.45	14	4.92	-	-	30.9	29.8	1
PG 16	0.35 - 0.45	14	4.92	-	-	44.1	44.1	1
PG 16	0.35 - 0.45	14	4.92	-	-	49.6	49.6	1
PG 16	0.35 - 0.45	14	4.92	-	-	63.9	57.3	2
PG 16	0.50 - 0.60	12	5.90	-	-	87.1	82.7	2
PG 16	0.50 - 0.60	12	5.90	-	-	132.3	122.4	2
PG 16	0.50 - 0.60	12	5.90	-	-	169.8	152.1	2
PG 16	0.50 - 0.60	12	5.90	-	-	232.6	202.8	2
PG 21	0.63 - 0.75	12	6.89	-	-	332.9	304.2	3
PG 21	0.63 - 0.75	12	6.89	-	-	416.7	381.4	3
PG 21	0.63 - 0.75	12	6.89	-	-	454.2	407.9	3
PG 21	0.63 - 0.75	12	6.89	-	-	520.3	476.2	3
PG 21	0.63 - 0.75	10	6.89	-	-	648.2	586.4	3
PG 21	0.63 - 0.75	10	6.89	-	-	749.6	672.4	4
PG 21	0.63 - 0.75	10	6.89	-	-	848.8	767.2	4
PG 21	0.63 - 0.75	10	6.89	-	-	925.9	815.7	4
PG 21	0.63 - 0.75	10	6.89	-	-	952.4	844.4	4
PG 29	0.90 - 0.98	8	9.84	-	-	1168.4	1069.2	4
PG 29	0.90 - 0.98	8	9.84	-	-	1278.7	1150.8	4
PG 29	0.90 - 0.98	8	9.84	-	-	1433.0	1366.9	4
900 RPM-60 Hz		***8 POLE THREE PHASE***				***SPV SERIES***		
PG 16	0.35 - 0.45	14	4.92	-	-	49.6	49.6	1
PG 16	0.35 - 0.45	14	4.92	-	-	63.9	63.9	1
PG 16	0.50 - 0.60	12	5.90	-	-	87.1	87.1	1
PG 16	0.50 - 0.60	12	5.90	-	-	132.3	132.3	1
PG 16	0.50 - 0.60	12	5.90	-	-	169.8	169.8	1
PG 16	0.50 - 0.60	12	5.90	-	-	232.6	232.6	1
PG 21	0.63 - 0.75	12	6.89	-	-	332.9	332.9	1
PG 21	0.63 - 0.75	12	6.89	-	-	416.7	416.7	1
PG 21	0.63 - 0.75	12	6.89	-	-	454.2	454.2	1
PG 21	0.63 - 0.75	12	6.89	-	-	566.6	535.7	2
PG 21	0.63 - 0.75	10	6.89	-	-	661.4	617.3	2
PG 21	0.63 - 0.75	10	6.89	-	-	822.3	760.6	2
PG 21	0.63 - 0.75	10	6.89	-	-	948.0	864.2	2
PG 21	0.63 - 0.75	10	6.89	-	-	992.1	948.0	2
PG 29	0.90 - 0.98	8	9.84	-	-	1289.7	1234.6	2
PG 29	0.90 - 0.98	8	9.84	-	-	1466.1	1411.0	2
PG 29	0.90 - 0.98	8	9.84	-	-	1631.4	1532.2	2
PG 29	0.90 - 0.98	8	9.84	-	-	1741.7	1609.4	2

7.3 MOUNTING & WIRING DATA

IDENTIFICATION DATA			MOUNTING DATA				
Type	EX	SZ	Mounting System	Bolt Quantity	Bolt Type	Bolt Class	Tightening Torque [Foot Lbs]
SPV SERIES			**10 POLE THREE PHASE**				**600 RPM-50 Hz**
SPV 1.7 E	01	6.0	Foot Mount	4	M16	5	153.04
SPV 3.7 E/P	01	6.5	Foot Mount	4	M16	5	349.92
SPV 2.7 E	00	7.0	Foot Mount	4	M16	5	251.66
SPV 4.5 E/P	00	7.5	Foot Mount	4	M16	5	409.08
SPV 4.0 E	01	8.0	Foot Mount	4	M16	5	360.14
SPV 6.5 E	00	9.0	Foot Mount	4	M20	5	522.87
SPV SERIES			**12 POLE THREE PHASE**				**500 RPM-50 Hz**
SPV 1.2 F	01	6.0	Foot Mount	4	M16	5	106.28
SPV 2.5 F/P	01	6.5	Foot Mount	4	M16	5	243.00
SPV 1.9 F	00	7.0	Foot Mount	4	M16	5	174.76
SPV 3.0 F/P	00	7.5	Foot Mount	4	M16	5	284.09
SPV 2.6 F	01	8.0	Foot Mount	4	M16	5	250.09
SPV 4.3 F	00	9.0	Foot Mount	4	M20	5	363.11
SPV SERIES			**2 POLE SINGLE PHASE**				**3000 RPM-50 Hz**
SPV 1.2 AM	00	2.0	Foot Mount	4	M9	5	89.10
SPV 1.8 AM	00	2.1	Foot Mount	4	M9	5	148.51
SPV 2.7 AM	00	3.0	Foot Mount	4	M12	5	219.07
SPV 4.5 AM	00	4.0	Foot Mount	4	M12	5	365.13
SPV 7.0 AM	00	5.0	Foot Mount	4	M16	5	584.21
SPV 9.0 AM	01	6.0	Foot Mount	4	M16	5	741.63
SPV 12.0 AM	01	6.1	Foot Mount	4	M16	5	988.84

WIRING DATA						WT [Lbs]		DWG
Cable Grip	Feeding Cable Diameter [in]	Feeding Conductor Guage	Min. Bending Radius [in]	Capacitor [µF] 120V	Capacitor [µF] 220V	50Hz	60Hz	
720 RPM-60 Hz		***6 POLE THREE PHASE***				***SPV SERIES***		
PG 16	0.50 - 0.60	12	5.90	-	-	87.1	87.1	2
PG 16	0.50 - 0.60	12	5.90	-	-	114.6	114.6	2
PG 16	0.50 - 0.60	12	5.90	-	-	112.4	112.4	2
PG 16	0.50 - 0.60	12	5.90	-	-	123.5	123.5	2
PG 16	0.50 - 0.60	12	5.90	-	-	169.8	169.8	2
PG 16	0.50 - 0.60	12	5.90	-	-	232.6	232.6	2
3600 RPM-60 Hz		***2 POLE SINGLE PHASE***				***SPV SERIES***		
PG 16	0.50 - 0.60	12	5.90	-	-	87.1	87.1	2
PG 16	0.50 - 0.60	12	5.90	-	-	114.6	114.6	2
PG 16	0.50 - 0.60	12	5.90	-	-	112.4	112.4	2
PG 16	0.50 - 0.60	12	5.90	-	-	123.5	123.5	2
PG 16	0.50 - 0.60	12	5.90	-	-	169.8	169.8	2
PG 16	0.50 - 0.60	12	5.90	-	-	232.6	232.6	2
3600 RPM-60 Hz		***2 POLE SINGLE PHASE***				***SPV SERIES***		
PG 16	0.35 - 0.45	14	4.92	-	-	49.6	49.6	1
PG 16	0.35 - 0.45	14	4.92	-	-	63.9	63.9	1
PG 16	0.35 - 0.45	14	4.92	-	-	87.1	87.1	1
PG 16	0.35 - 0.45	14	4.92	45	12.5	132.3	132.3	1
PG 16	0.35 - 0.45	14	4.92	75	20	169.8	169.8	1
PG 16	0.50 - 0.60	12	5.90	60	-	232.6	232.6	1
PG 16	0.50 - 0.60	12	5.90	90	-	332.9	332.9	1

7.4 BEARINGS & LUBRICATION DATA

IDENTIFICATION DATA			BEARING FEATURES							
Type	EX	SZ	Bearing		Life Expectancy					
					50 Hz			60 Hz		
			Type	Class	100	80	60	100	80	60
					[Hrs]					
SPV SERIES			***2 POLE THREE PHASE***							***3000 RPM-50 Hz***
SPV 1.2 A	00	2.0	62022Z	C3	8988	17555	41612	4311	8421	19960
SPV 1.8 A	00	2.1	63022Z	C3	6127	11967	28366	4985	9737	23080
SPV 2.7 A	00	3.0	63032Z	C3	3018	5894	13971	2842	5551	13159
SPV 4.5 A	00	4.0	63052Z	C3	3107	6069	14385	1681	3283	7782
SPV 7.0 A	00	5.0	NJ305	C4	9993	21026	54854	6443	13557	35368
SPV 9.0 A	01	6.0	NJ2206	C4	7808	16427	42857	7455	15684	40920
SPV 12.0 A	01	6.1	NJ2206	C4	2977	6263	16340	3525	7416	19347
SPV 15.0 A	00	7.0	NJ308	C4	5644	11875	30980	4032	8484	22133
SPV 19.0 A	00	8.0	NJ2308	C4	7763	16333	42611	3649	7678	20032
SPV 25.0 A	00	9.0	NJ2309	C4	7734	16272	42454	3636	7650	19958
SPV 32.0 A	00	10.0	NJ2311	C4	8039	16914	44127	3779	7951	20745
SPV 50.0 A	00	11.0	NJ2313	C4	5614	11812	30816	4617	9715	25345
SPV 60.0 A	00	12.0	NJ2314	C4	4140	8709	22722	4058	8538	22276
SPV 70.0 A	00	12.9	NJ2315	C4	4631	9743	25419	3580	7532	19652
SPV 85.0 A	00	13.0	NJ2317	C4	3436	7230	18862	3116	6556	17104
SPC SERIES			***2 POLE THREE PHASE***							***3000 RPM-50 Hz***
SPC 9.0 A	00	6.0	NJ2206	C4	7808	16427	42857	7455	15684	40920
SPC 12.0 A	00	6.1	NJ2206	C4	2977	6263	16340	3525	7416	19347
SPV SERIES			***4 POLE THREE PHASE***							***1500 RPM-50 Hz***
SPV 0.5 B	00	2.0	62022Z	C3	231969	453065	999999	126442	246957	585381
SPV 0.8 B	00	2.1	63022Z	C3	125520	245157	581112	74452	145415	344687
SPV 2.2 B	00	3.0	63032Z	C3	9892	19321	45797	8049	15720	37263
SPV 3.8 B	00	4.0	63052Z	C3	8426	16457	39010	7122	13911	32974
SPV 5.1 B	00	4.1	NJ305	C4	49900	104986	273900	34410	72397	188878
SPV 6.7 B	00	5.0	NJ305	C4	22260	46833	122185	21254	44717	116662
SPV 10.0 B	01	6.0	NJ2206	C4	9856	20736	54099	8532	17950	46830
SPV 15.0 B	00	7.0	NJ308	C4	13976	29404	76713	9412	19803	51665
SPV 20.0 B	00	8.0	NJ2308	C4	15103	31776	82901	15281	32151	83879
SPV 25.5 B	00	9.0	NJ2309	C4	12883	27105	70715	8677	18255	47626
SPV 35.0 B	00	10.0	NJ2311	C4	16460	34631	90349	11086	23323	60849
SPV 47.5 B	00	11.0	NJ2313	C4	12165	25595	66776	8193	17238	44973
SPV 55.0 B	00	12.0	NJ2314	C4	13310	28004	73060	8525	17936	46793
SPV 63.0 B	00	12.9	NJ2315	C4	11988	25221	65800	9659	20322	53019
SPV 77.0 B	00	13.0	NJ2317	C4	9372	19719	51445	7647	16089	41976
SPV 83.0 B	00	14.0	NJ2318	C4	10876	22882	59698	8763	18437	48101
SPV 105.0 B	01	14.1	NJ2320	C4	11927	25094	65469	8521	17928	46773

ORIGINAL LUBRICATION				PERIODIC LUBRICATION		GREASE REPLACEMENT	
System	Life [Hrs]	Grease Type [Kleuber]		Quantity [oz]	Interval [Hrs]	Quantity [g]	Interval [Hrs]
3600 RPM-60 Hz				***2 POLE THREE PHASE***		***SPV SERIES***	
LIFETIME	-	-	-	-	-	-	-
LIFETIME	-	-	-	-	-	-	-
LIFETIME	-	-	-	-	-	-	-
LIFETIME	-	-	-	-	-	-	-
RE-LUBE	-	ISOFLEX	NBU 15	0.14	1000	0.28	-
RE-LUBE	-	ISOFLEX	NBU 15	0.18	750	0.32	-
RE-LUBE	-	ISOFLEX	NBU 15	0.18	500	0.32	-
RE-LUBE	-	ISOFLEX	NBU 15	0.39	750	0.74	-
RE-LUBE	-	ISOFLEX	NBU 15	0.60	1000	1.13	-
RE-LUBE	-	ISOFLEX	NBU 15	0.70	1000	1.27	-
RE-LUBE	-	ISOFLEX	NBU 15	0.88	1000	1.59	-
RE-LUBE	-	ISOFLEX	NBU 15	1.41	1000	2.65	-
RE-LUBE	-	ISOFLEX	NBU 15	1.94	1000	3.53	-
RE-LUBE	-	ISOFLEX	NBU 15	2.12	1000	4.06	-
LONGLIFE	5000	STABURAGS	NBU 8 EP	3.00	1000	5.64	5000
3600 RPM-60 Hz				***2 POLE THREE PHASE***		***SPC SERIES***	
RE-LUBE	-	ISOFLEX	NBU 15	0.18	750	.32	-
RE-LUBE	-	ISOFLEX	NBU 15	0.18	500	.32	-
1800 RPM-60 Hz				***4 POLE THREE PHASE***		***SPV SERIES***	
LIFETIME	-	-	-	-	-	-	-
LIFETIME	-	-	-	-	-	-	-
LIFETIME	-	-	-	-	-	-	-
LIFETIME	-	-	-	-	-	-	-
LONGLIFE	5000	STABURAGS	NBU 8EP	0.14	1000	0.28	5000
LONGLIFE	5000	STABURAGS	NBU 8EP	0.14	1000	0.28	5000
LONGLIFE	5000	STABURAGS	NBU 8EP	0.18	1000	0.32	5000
LONGLIFE	5000	STABURAGS	NBU 8EP	0.39	1000	0.74	5000
LONGLIFE	5000	STABURAGS	NBU 8EP	0.60	1000	1.13	5000
LONGLIFE	5000	STABURAGS	NBU 8EP	0.70	1000	1.27	5000
LONGLIFE	5000	STABURAGS	NBU 8EP	0.88	1000	1.59	5000
LONGLIFE	5000	STABURAGS	NBU 8EP	1.41	1000	2.65	5000
LONGLIFE	5000	STABURAGS	NBU 8EP	1.94	1000	3.53	5000
LONGLIFE	5000	STABURAGS	NBU 8EP	2.12	1000	4.06	5000
LONGLIFE	5000	STABURAGS	NBU 8EP	3.00	1000	5.64	5000
LONGLIFE	5000	STABURAGS	NBU 8EP	3.53	1000	6.70	5000
LONGLIFE	5000	STABURAGS	NBU 8EP	4.59	1000	8.46	5000

7.4 BEARINGS & LUBRICATION DATA

IDENTIFICATION DATA			BEARING FEATURES							
Type	EX	SZ	Bearing		Life Expectancy					
					50 Hz			60 Hz		
			Type	Class	100	80	60	100	80	60
					[Hrs]					
SPV SERIES			**6 POLE THREE PHASE**						**1000 RPM-50 Hz**	
SPV 1.1 C	00	3.0	63032Z	C3	93353	182330	432189	45020	87929	208424
SPV 1.7 C	00	4.0	63052Z	C3	135201	264065	625931	37732	73696	174686
SPV 2.2 C	00	4.1	63052Z	C3	53607	104702	248183	14961	29220	69263
SPV 3.8 C	00	5.0	NJ305	C4	181018	380852	993616	116716	245563	640656
SPV 5.0 C	01	6.0	NJ2206	C4	130804	275204	717988	51399	108140	282129
SPV 8.0 C	00	7.0	NJ308	C4	136596	287390	749781	72887	153351	400081
SPV 12.0 C	01	8.0	NJ2308	C4	118710	249758	651602	78762	165712	432330
SPV 17.0 C	00	9.0	NJ309	C4	21948	46178	120476	21878	46029	120086
SPV 27.0 C	00	10.0	NJ2311	C4	53411	112373	293173	30740	64674	168731
SPV 35.5 C	00	11.0	NJ2313	C4	44273	93148	243016	30767	64731	168879
SPV 41.5 C	00	11.1	NJ2313	C4	24890	52366	136620	20587	43314	113004
SPV 50.0 C	00	12.0	NJ2314	C4	19345	40702	106188	14316	30121	78583
SPV 61.0 C	00	12.9	NJ2315	C4	19144	40278	105082	16695	35126	91640
SPV 80.0 C	00	13.0	NJ2317	C4	11542	24283	63353	9339	19650	51264
SPV 90.5 C	00	14.0	NJ2318	C4	12381	26049	67960	10797	22717	59267
SPV 114.0 C	01	14.1	NJ2320	C4	14989	31537	82277	14810	31159	81291
SPV 122.0 C	01	14.2	NJ2320	C4	12100	25457	66416	10734	22584	58921
SPV 140.0 C	00	15.0	NJ2322	C4	11137	23431	61129	8700	18304	47755
SPV 160.0 C	00	15.1	NJ2324	C4	14271	30025	78332	12660	26636	69492
SPV 190.0 C	00	16.0	NJ2326	C4	13865	29171	76104	5579	11738	30624
SPV SERIES			**8 POLE THREE PHASE**						**750 RPM-50 Hz**	
SPV 1.3 D	00	4.1	63052Z	C3	377393	737095	999999	105323	205710	487608
SPV 2.1 D	00	5.0	NJ305	C4	999999	999999	999999	378902	797187	999999
SPV 2.8 D	01	6.0	NJ2206	C4	999999	999999	999999	273795	576048	999999
SPV 4.5 D	00	7.0	NJ308	C4	999999	999999	999999	285919	601556	999999
SPV 7.0 D	01	8.0	NJ2308	C4	999999	999999	999999	248480	522786	999999
SPV 10.0 D	00	9.0	NJ309	C4	185894	391109	999999	45942	96659	252176
SPV 15.5 D	00	10.0	NJ2311	C4	452364	951747	999999	111797	235215	613660
SPV 20.0 D	00	11.0	NJ2313	C4	374973	788921	999999	92671	194974	508674
SPV 23.5 D	00	11.1	NJ2313	C4	210803	443518	999999	52098	109611	285968
SPV 28.0 D	00	12.0	NJ2314	C4	93039	195748	510963	40707	85646	223445
SPV 42.5 D	00	12.9	NJ2315	C4	79966	168244	438936	40071	84308	219954
SPV 56.0 D	00	13.0	NJ2317	C4	47785	100536	262291	24159	50829	132609
SPV 66.5 D	00	14.0	NJ2318	C4	42096	88567	231066	25781	54241	141510
SPV 78.5 D	01	14.1	NJ2320	C4	68716	144575	377185	25195	53009	138296
SPV 100.0 D	00	15.0	NJ2322	C4	40367	84929	221574	14878	31302	81666
SPV 124.0 D	00	15.1	NJ2324	C4	41307	86908	226737	14091	29647	77347
SPV 142.0 D	00	16.0	NJ2326	C4	44485	93593	244177	19069	40119	104668
SPV 1164.0 D	00	16.1	NJ2326	C4	27734	58350	152232	13079	27517	71790

ORIGINAL LUBRICATION			PERIODIC LUBRICATION		GREASE REPLACEMENT	
System	Life [Hrs]	Grease Type [Kleuber]	Quantity [oz]	Interval [Hrs]	Quantity [oz]	Interval [Hrs]
1200RPM-60 Hz			***6 POLE THREE PHASE***		***SPV SERIES***	
LIFETIME	-	- -	-	-	-	-
LIFETIME	-	- -	-	-	-	-
LIFETIME	-	- -	-	-	-	-
LONGLIFE	6000	STABURAGS NBU 8 EP	0.14	1000	0.28	6000
LONGLIFE	6000	STABURAGS NBU 8EP	0.18	1000	0.32	6000
LONGLIFE	6000	STABURAGS NBU 8EP	0.39	1000	0.74	6000
LONGLIFE	6000	STABURAGS NBU 8EP	0.60	1000	1.13	6000
LONGLIFE	6000	STABURAGS NBU 8EP	0.56	1000	1.06	6000
LONGLIFE	6000	STABURAGS NBU 8EP	0.88	1000	1.59	6000
LONGLIFE	6000	STABURAGS NBU 8EP	1.41	1000	2.65	6000
LONGLIFE	6000	STABURAGS NBU 8EP	1.41	1000	2.65	6000
LONGLIFE	6000	STABURAGS NBU 8EP	1.94	1000	3.53	6000
LONGLIFE	6000	STABURAGS NBU 8EP	2.12	1000	4.06	6000
LONGLIFE	6000	STABURAGS NBU 8EP	3.00	1000	5.64	6000
LONGLIFE	6000	STABURAGS NBU 8EP	3.53	1000	6.70	6000
LONGLIFE	6000	STABURAGS NBU 8EP	4.59	1000	8.46	6000
LONGLIFE	6000	STABURAGS NBU 8EP	4.59	1000	8.46	6000
LONGLIFE	6000	STABURAGS NBU 8EP	5.64	1000	10.93	6000
LONGLIFE	6000	STABURAGS NBU 8EP	6.70	1000	13.05	6000
LONGLIFE	6000	STABURAGS NBU 8EP	7.76	1000	15.17	6000
900 RPM-60 Hz			***8 POLE THREE PHASE***		***SPV SERIES***	
LIFETIME	-	- -	-	-	-	-
LONGLIFE	6000	STABURAGS NBU 8EP	0.14	1000	0.28	6000
LONGLIFE	6000	STABURAGS NBU 8EP	0.18	1000	0.32	6000
LONGLIFE	6000	STABURAGS NBU 8EP	0.39	1000	0.74	6000
LONGLIFE	6000	STABURAGS NBU 8EP	0.60	1000	1.13	6000
LONGLIFE	6000	STABURAGS NBU 8EP	0.56	1000	1.06	6000
LONGLIFE	6000	STABURAGS NBU 8EP	0.88	1000	1.59	6000
LONGLIFE	6000	STABURAGS NBU 8EP	1.41	1000	2.65	6000
LONGLIFE	6000	STABURAGS NBU 8EP	1.41	1000	2.65	6000
LONGLIFE	6000	STABURAGS NBU 8EP	1.94	1000	3.53	6000
LONGLIFE	6000	STABURAGS NBU 8EP	2.12	1000	4.06	6000
LONGLIFE	6000	STABURAGS NBU 8EP	3.00	1000	5.64	6000
LONGLIFE	6000	STABURAGS NBU 8EP	3.53	1000	6.70	6000
LONGLIFE	6000	STABURAGS NBU 8EP	4.59	1000	8.46	6000
LONGLIFE	6000	STABURAGS NBU 8EP	5.64	1000	10.93	6000
LONGLIFE	6000	STABURAGS NBU 8EP	6.70	1000	13.05	6000
LONGLIFE	6000	STABURAGS NBU 8EP	7.76	1000	15.17	6000
LONGLIFE	6000	STABURAGS NBU 8EP	7.76	1000	15.17	6000

7.4 BEARINGS & LUBRICATION DATA

IDENTIFICATION DATA			BEARING FEATURES							
Type	EX	SZ	Bearing		Life Expectancy					
					50 Hz			60 Hz		
			Type	Class	100	80	60	100	80	60
					[Hrs]					
SPV SERIES			**10 POLE THREE PHASE**						**600 RPM-50 Hz**	
SPV 1.7 E	01	6.0	NJ2206	C4	999999	999999	999999	999999	999999	999999
SPV 3.7 E/P	01	6.5	NJ2206	C4	406547	855350	999999	99919	210224	548459
SPV 2.7 E	00	7.0	NJ308	C4	999999	999999	999999	999999	999999	999999
SPV 4.5 E/P	00	7.5	NJ308	C4	999999	999999	999999	323631	680901	999999
SPV 4.0 E	01	8.0	NJ2308	C4	999999	999999	999999	999999	999999	999999
SPV 6.5 E	00	9.0	NJ309	C4	999999	999999	999999	262586	552465	999999
SPV SERIES			**12 POLE THREE PHASE**						**500 RPM-50 Hz**	
SPV 1.2 F	01	6.0	NJ2206	C4	999999	999999	999999	999999	999999	999999
SPV 2.5 F/P	01	6.5	NJ2206	C4	999999	999999	999999	413437	869847	999999
SPV 1.9 F	00	7.0	NJ308	C4	999999	999999	999999	999999	999999	999999
SPV 3.0 F/P	00	7.5	NJ308	C4	999999	999999	999999	999999	999999	999999
SPV 2.6 F	01	8.0	NJ2308	C4	999999	999999	999999	999999	999999	999999
SPV 4.3 F	00	9.0	NJ309	C4	999999	999999	999999	999999	999999	999999
SPV SERIES			**2 POLE SINGLE PHASE**						**3000 RPM-50 Hz**	
SPV 1.2 AM	00	2.0	62022Z	C3	9959	19450	46105	4776	9328	22111
SPV 1.8 AM	00	2.1	63022Z	C3	6753	13190	31265	5464	10672	25297
SPV 2.7 AM	00	3.0	63032Z	C3	3436	6711	15907	3218	6285	14898
SPV 4.5 AM	00	4.0	63052Z	C3	3459	6756	16013	1871	3654	8660
SPV 7.0 AM	00	5.0	NJ305	C4	11209	23583	61526	7148	15039	39234
SPV 9.0 AM	01	6.0	NJ2206	C4	8953	18837	49144	8501	17885	46660
SPV 12.0 AM	01	6.1	NJ2206	C4	3393	7140	18626	3995	8406	21931

ORIGINAL LUBRICATION			PERIODIC LUBRICATION		GREASE REPLACEMENT	
System	Life [Hrs]	Grease Type [Kleuber]	Quantity [oz]	Interval [Hrs]	Quantity [oz]	Interval [Hrs]
900 RPM-60 Hz			***10 POLE THREE PHASE***		***SPV SERIES***	
LONGLIFE	6000	STABURAGS NBU 8EP	0.18	1000	0.32	6000
LONGLIFE	6000	STABURAGS NBU 8EP	0.18	1000	0.32	6000
LONGLIFE	6000	STABURAGS NBU 8EP	0.39	1000	0.74	6000
LONGLIFE	6000	STABURAGS NBU 8EP	0.39	1000	0.74	6000
LONGLIFE	6000	STABURAGS NBU 8EP	0.60	1000	1.13	6000
LONGLIFE	6000	STABURAGS NBU 8EP	0.56	1000	1.06	6000
600 RPM-60 Hz			***12 POLE THREE PHASE***		***SPV SERIES***	
LONGLIFE	6000	STABURAGS NBU 8EP	0.18	1000	0.32	6000
LONGLIFE	6000	STABURAGS NBU 8EP	0.18	1000	0.32	6000
LONGLIFE	6000	STABURAGS NBU 8EP	0.39	1000	0.74	6000
LONGLIFE	6000	STABURAGS NBU 8EP	0.39	1000	0.74	6000
LONGLIFE	6000	STABURAGS NBU 8EP	0.60	1000	1.13	6000
LONGLIFE	6000	STABURAGS NBU 8EP	0.56	1000	1.06	6000
3600 RPM-60 Hz			***2 POLE SINGLE PHASE***		***SPV SERIES***	
LIFETIME	-	- -	-	-	-	-
LIFETIME	-	- -	-	-	-	-
LIFETIME	-	- -	-	-	-	-
LIFETIME	-	- -	-	-	-	-
RE-LUBE	-	ISOFLEX NBU 15	0.1	1000	0.28	-
RE-LUBE	-	ISOFLEX NBU 15	0.18	750	0.32	-
RE-LUBE	-	ISOFLEX NBU 15	0.18	500	0.32	-

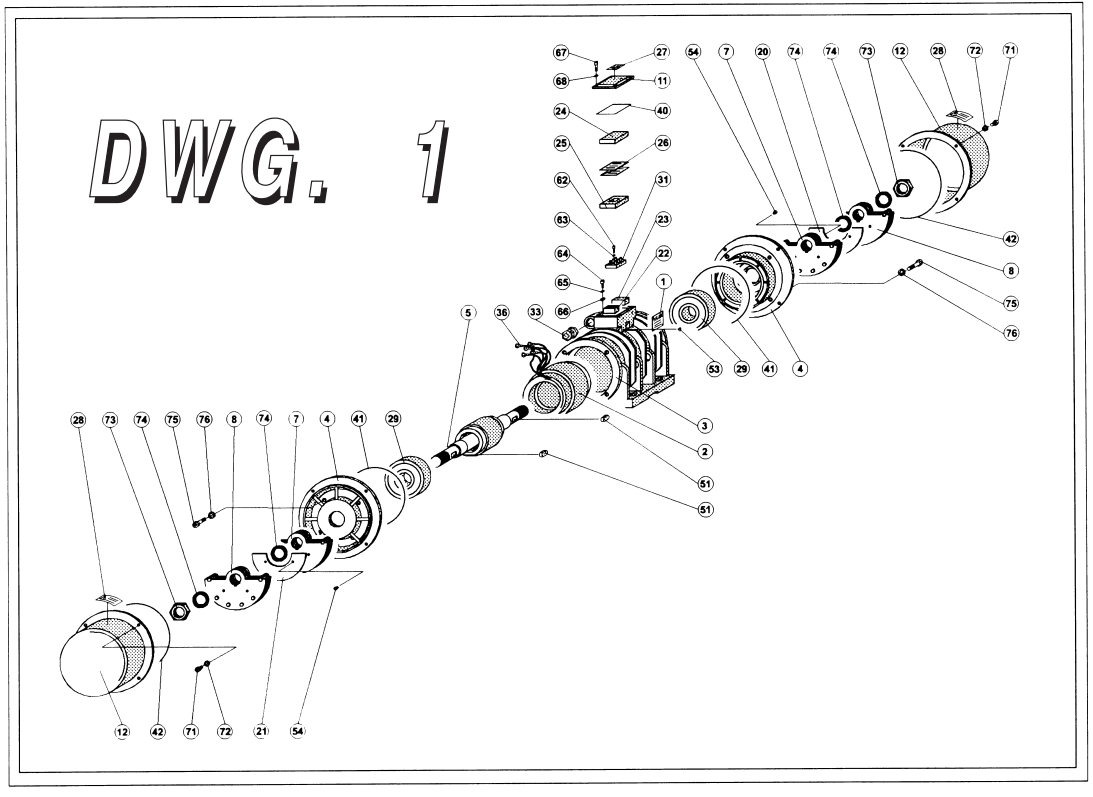

NO.	DESCRIPTION
1	NAMEPLATE
2	STATOR
3	CASING
4	FLANGE
5	ROTOR SHAFT
6	SPACER
7	FIXED WEIGHT
8	ADJUSTABLE WEIGHT
10	BEARING COVER
11	TERMINAL BOX COVER
12	WEIGHT COVER
20	ADJUSTING PLATE (RT)
21	ADJUSTING PLATE (LFT)
22	SPONGE
23	SPONGE
24	SPONGE SEAL
25	SPONGE SEAL
26	WIRING DIAGRAM
27	TERM. BOX COV. LABEL
28	WEIGHT COVER LABEL
29	BEARING
30	GREASE RETAINING RING
31	TERMINAL BLOCK
32	THERMISTOR BLOCK
33	POWER CORD INLET
34	THERMISTOR CORD INLET
35	PLUG
36	EYELET TERMINAL
37	DRILL TERMINAL
40	TERM. BOX O-RING SEAL
41	BEARINGS O-RING SEAL
42	WT COVER O-RING SEAL
50	GREASE FITTING
51	ROTOR SHAFT KEY
52	SNAP RING
53	NAMEPLATE RIVET
54	ADJUSTING PLATE RIVET
60	THERMISTOR SCREW
61	THERMISTER WASHER
62	TERMINAL BLOCK SCREW
63	TERMINAL BLOCK WASHER
64	GROUND SCREW
65	GROUND WASHER
66	BRASS WASHER
67	TERM BOX COV SCREW
68	TERM BOX COV WASHER
69	BEARING COVER SCREW
70	BEARING COVER WASHER
71	WEIGHT COVER SCREW
72	WEIGHT COVER WASHER
73	WEIGHT SCREW
74	WEIGHT WASHER
75	FLANGE SCREW
76	FLANGE WASHER

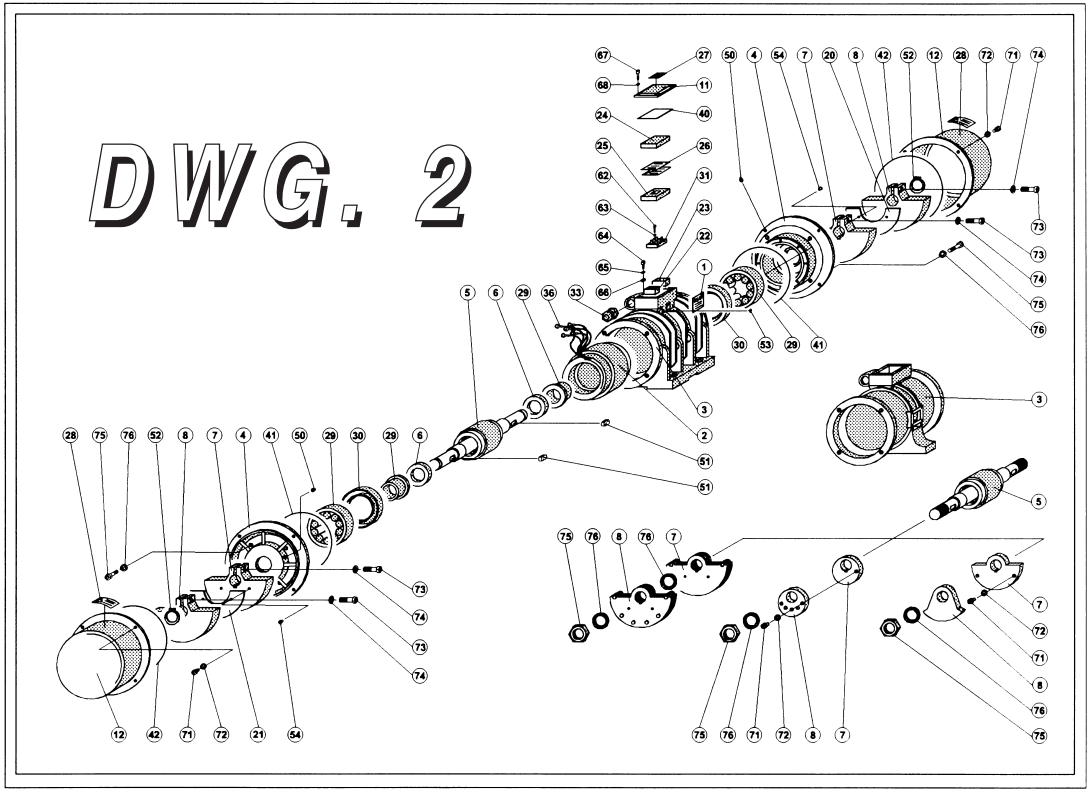

NO.	DESCRIPTION
1	NAMEPLATE
2	STATOR
3	CASING
4	FLANGE
5	ROTOR SHAFT
6	SPACER
7	FIXED WEIGHT
8	ADJUSTABLE WEIGHT
10	BEARING COVER
11	TERMINAL BOX COVER
12	WEIGHT COVER
20	ADJUSTING PLATE (RT)
21	ADJUSTING PLATE (LFT)
22	SPONGE
23	SPONGE
24	SPONGE SEAL
25	SPONGE SEAL
26	WIRING DIAGRAM
27	TERM. BOX COV. LABEL
28	WEIGHT COVER LABEL
29	BEARING
30	GREASE RETAINING RING
31	TERMINAL BLOCK
32	THERMISTOR BLOCK
33	POWER CORD INLET
34	THERMISTOR CORD INLET
35	PLUG
36	EYELET TERMINAL
37	DRILL TERMINAL
40	TERM. BOX O-RING SEAL
41	BEARINGS O-RING SEAL
42	WT COVER O-RING SEAL
50	GREASE FITTING
51	ROTOR SHAFT KEY
52	SNAP RING
53	NAMEPLATE RIVET
54	ADJUSTING PLATE RIVET
60	THERMISTOR SCREW
61	THERMISTER WASHER
62	TERMINAL BLOCK SCREW
63	TERMINAL BLOCK WASHER
64	GROUND SCREW
65	GROUND WASHER
66	BRASS WASHER
67	TERM BOX COV SCREW
68	TERM BOX COV WASHER
69	BEARING COVER SCREW
70	BEARING COVER WASHER
71	WEIGHT COVER SCREW
72	WEIGHT COVER WASHER
73	WEIGHT SCREW
74	WEIGHT WASHER
75	FLANGE SCREW
76	FLANGE WASHER

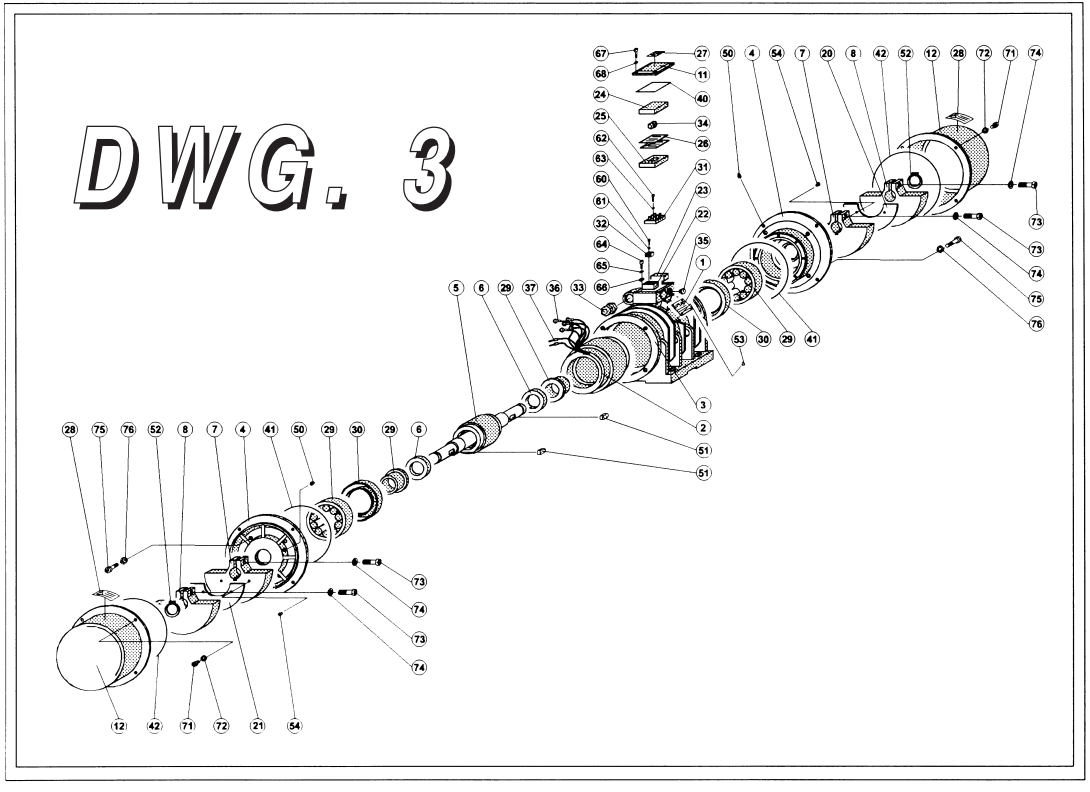

NO.	DESCRIPTION
1	NAMEPLATE
2	STATOR
3	CASING
4	FLANGE
5	ROTOR SHAFT
6	SPACER
7	FIXED WEIGHT
8	ADJUSTABLE WEIGHT
10	BEARING COVER
11	TERMINAL BOX COVER
12	WEIGHT COVER
20	ADJUSTING PLATE (RT)
21	ADJUSTING PLATE (LFT)
22	SPONGE
23	SPONGE
24	SPONGE SEAL
25	SPONGE SEAL
26	WIRING DIAGRAM
27	TERM. BOX COV. LABEL
28	WEIGHT COVER LABEL
29	BEARING
30	GREASE RETAINING RING
31	TERMINAL BLOCK
32	THERMISTOR BLOCK
33	POWER CORD INLET
34	THERMISTOR CORD INLET
35	PLUG
36	EYELET TERMINAL
37	DRILL TERMINAL
40	TERM. BOX O-RING SEAL
41	BEARINGS O-RING SEAL
42	WT COVER O-RING SEAL
50	GREASE FITTING
51	ROTOR SHAFT KEY
52	SNAP RING
53	NAMEPLATE RIVET
54	ADJUSTING PLATE RIVET
60	THERMISTOR SCREW
61	THERMISTER WASHER
62	TERMINAL BLOCK SCREW
63	TERMINAL BLOCK WASHER
64	GROUND SCREW
65	GROUND WASHER
66	BRASS WASHER
67	TERM BOX COV SCREW
68	TERM BOX COV WASHER
69	BEARING COVER SCREW
70	BEARING COVER WASHER
71	WEIGHT COVER SCREW
72	WEIGHT COVER WASHER
73	WEIGHT SCREW
74	WEIGHT WASHER
75	FLANGE SCREW
76	FLANGE WASHER

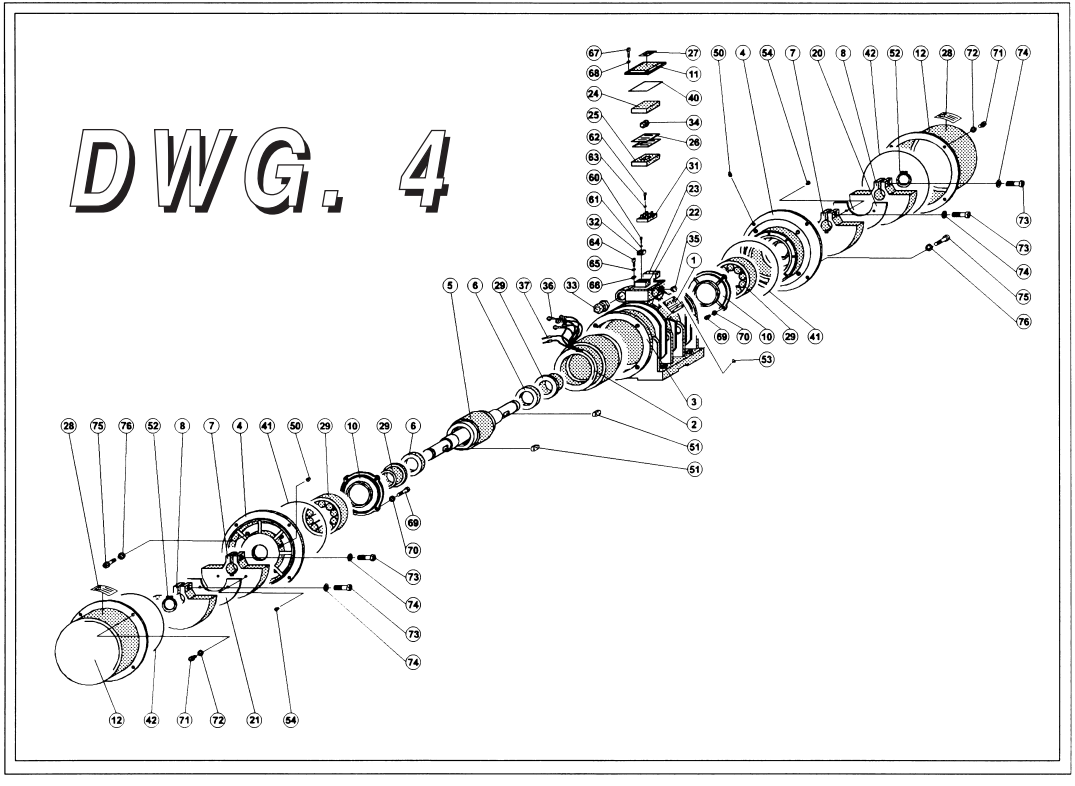

NO.	DESCRIPTION
1	NAMEPLATE
2	STATOR
3	CASING
4	FLANGE
5	ROTOR SHAFT
6	SPACER
7	FIXED WEIGHT
8	ADJUSTABLE WEIGHT
10	BEARING COVER
11	TERMINAL BOX COVER
12	WEIGHT COVER
20	ADJUSTING PLATE (RT)
21	ADJUSTING PLATE (LFT)
22	SPONGE
23	SPONGE
24	SPONGE SEAL
25	SPONGE SEAL
26	WIRING DIAGRAM
27	TERM. BOX COV. LABEL
28	WEIGHT COVER LABEL
29	BEARING
30	GREASE RETAINING RING
31	TERMINAL BLOCK
32	THERMISTOR BLOCK
33	POWER CORD INLET
34	THERMISTOR CORD INLET
35	PLUG
36	EYELET TERMINAL
37	DRILL TERMINAL
40	TERM. BOX O-RING SEAL
41	BEARINGS O-RING SEAL
42	WT COVER O-RING SEAL
50	GREASE FITTING
51	ROTOR SHAFT KEY
52	SNAP RING
53	NAMEPLATE RIVET
54	ADJUSTING PLATE RIVET
60	THERMISTOR SCREW
61	THERMISTER WASHER
62	TERMINAL BLOCK SCREW
63	TERMINAL BLOCK WASHER
64	GROUND SCREW
65	GROUND WASHER
66	BRASS WASHER
67	TERM BOX COV SCREW
68	TERM BOX COV WASHER
69	BEARING COVER SCREW
70	BEARING COVER WASHER
71	WEIGHT COVER SCREW
72	WEIGHT COVER WASHER
73	WEIGHT SCREW
74	WEIGHT WASHER
75	FLANGE SCREW
76	FLANGE WASHER

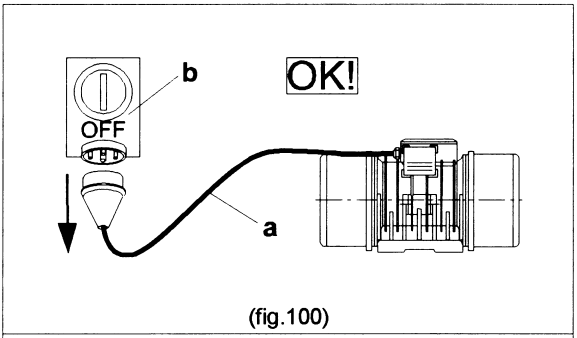

(fig.100)

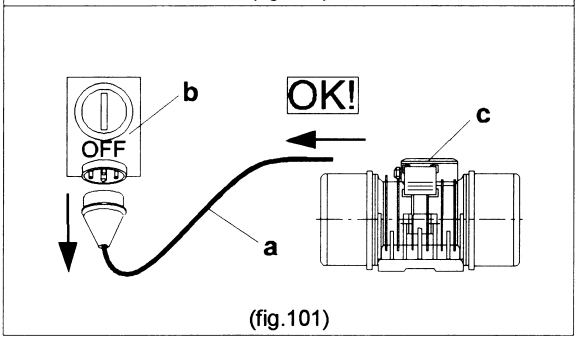

(fig.101)

8 OUT OF SERVICE

8.1 TEMPORARILY SUSPENDING SERVICE

If the vibrator will not be used for an extended period of time, disconnect the power cord (a) from the main power source (b) and ensure that it cannot be started accidentally or by unauthorized personnel (fig. 100).

8.2 DISPOSAL

If the vibrator is permanently out of service, and connot be repaired, remove the power cord (a) from the main power source (b) and from the terminal block (c) (fig. 101).

After making sure that there is no current connected to the vibrator, take it apart into homogeneous pieces, and discard according to environmental laws in your area.

MINIMUM MOUNTING REQUIREMENTS

VIBRATOR MODEL	MIN. WALL THICKNESS	CHANNEL LENGTH	CHANNEL SIZE	CHANNEL WEIGHT
SPV 0.5 B	12 guage	18" to 24"	2"	2.6 lbs/ft
SPV 0.8 B	12 guage	18" to 24"	4"	5.4 lbs/ft
SPV 1.2 A	1/8"	20" to 26"	5"	6.7 lbs/ft
SPV 2.7 A	3/16"	36" to 48"	4"	5.4 lbs/ft
SPV 4.5 A	1/4"	36" to 48"	4"	5.4 lbs/ft
SPV 7.0 A	1/4"	54" to 60"	4"	5.4 lbs/ft
SPV 9.0 A	3/8"	60" to 72"	4"	5.4 lbs/ft
SPV 12.0 A	3/8"	60" to 72"	4"	5.4 lbs/ft
SPV 15.0 A	3/8"	60" to 72"	6"	13.0 lbs/ft

APPENDIX A
BIN WALL MOUNTING PROCEDURES

This appendix contains specific information about installing your SPV Rotary Electric Vibrator on bins and hoppers. This section is supplemental, and is not intended as a replacement for the rest of the instructions and cautions in the manual. Please read the entire manual before beginning work on your vibrator, and follow all precautions contained herein.

GENERAL INFORMATION

A rigid, secure mount insures the most efficiency from your SPV Rotary Electric Vibrator. A weak mount will not allow optimal distribution of vibration, and can cause damage to the vibrator and/or the bin wall. All bin and hopper wall mounts require the use of an extended channel to prevent vibrator overload.

IMPORTANT
IF MOUNTED IMPROPERLY, OR WITHOUT EXTENDED CHANNEL, SERIOUS DAMAGE TO VIBRATOR AND/OR BIN CAN OCCUR.

Before beggining installation, refer to the chart on the left to determine the minimum bin wall thickness, and channel size you will need for the SPV Rotary Electric Vibrator you will be mounting.

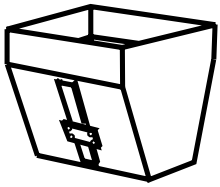

FLATSIDE HOPPER

(fig.102)

FLATBACK HOPPER

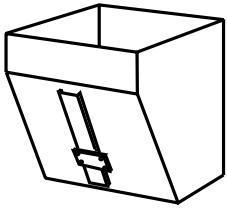

(fig.103)

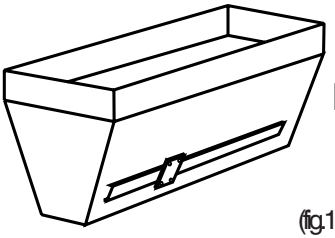

RECTANGULAR HOPPER

(fig.104)

SQUARE HOPPER

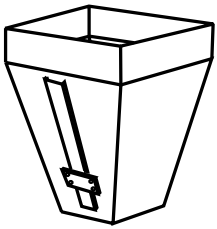

(fig.105)

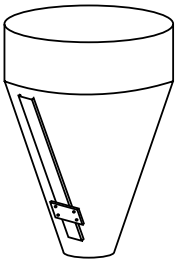

ROUND HOPPER

(fig.106)

Choose the Illustration at left that most closely resembles the structure to which you will mount your SPV Rotary Electric Vibrator. Follow the instructions below to determine the placement of your extended channel and mounting plate.

Figure 102: Attach the extended channel to the sloped wall in such a way that the channel will be perpindicular to the ground. Attach the mounting plate to the extended channel at 1/4 to 1/3 of the distance from the bottom of the hopper to the top. The mounting plate should be attached so that the length of the vibrator will be parallel to the ground once mounted.

Figure 103: Attach the extended channel to the bin wall opposite the vertical wall. The channel should be perpindicular to the ground. Attach the mounting plate to the bottom one third of the extended channel so that the length of the vibrator will be parallel to the ground once mounted.

Figure 104: Attach the extended channel to the lower third of the bin wall so that it runs parallel to the ground. Attach the mounting plate to the channel at 1/4 to 1/3 of the distance from the end of the bin or hopper. The mounting plate should be attached to the channel at one third of the length of the hopper so that the vibrator will be perpindicular to the ground once mounted.

Figure 105: Attach the extended channel to the center of any of the four bin walls, so that it is vertical. Attach the mounting plate in the lower one third of the channel so that the length of the vibrator will be parallel to the ground once mounted.

Figure 106: Attach the extended channel to the bin wall so that it is vertical. Attach the mounting plate to the lower one third of the channel so that the length of the vibrator will be parallel to the ground once mounted.

- FIGURE - DRAWINGS -

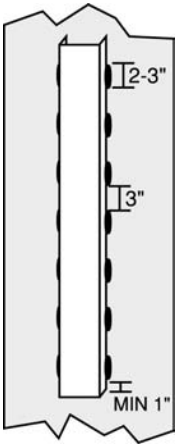

(fig.107)

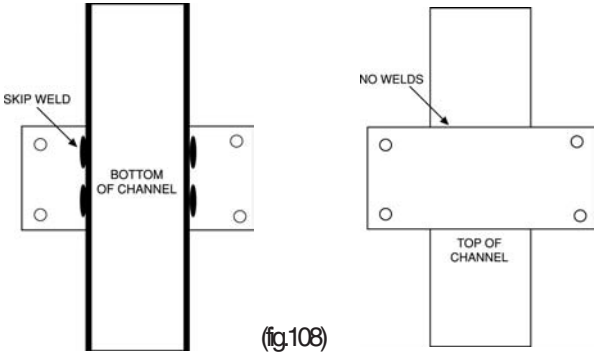

(fig.108)

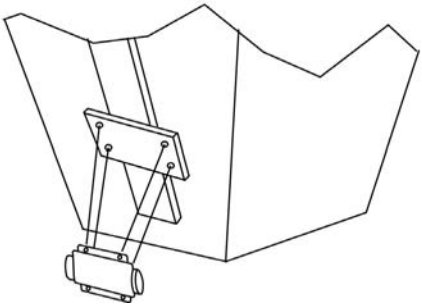

(fig.109)

ATTACHING CHANNEL TO BIN WALL

To attach the channel to the bin wall, skip weld the legs of the channel to the bin wall using 2-3” welds, and 3” skips. Stop the weld at least 1” from the end of the channel (fig.107).

If your bin or hopper is constructed from mild steel, use normal mild steel rod. If the bin or hopper is constructed from stainless steel, you can still attach mild steel channels to the stainless steel wall using welding rod of the same stainless steel type.

ATTACHING MOUNTING PLATE TO CHANNEL

Skip weld the mounting plate to the channel by welding parallel to the length of the channel. Do not weld along the length of the mounting plate (fig.108).

The mounting plate should be at a 90° angle to the channel, so that the length of the vibrator will run parallel to the ground once mounted (fig.109).

- FIGURE - DRAWINGS -

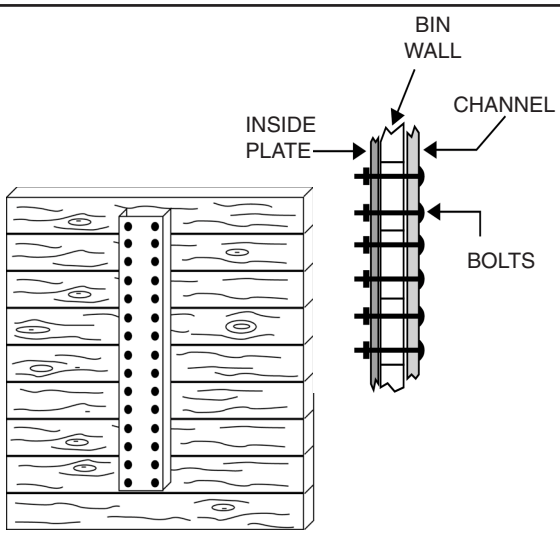

(fig.110)

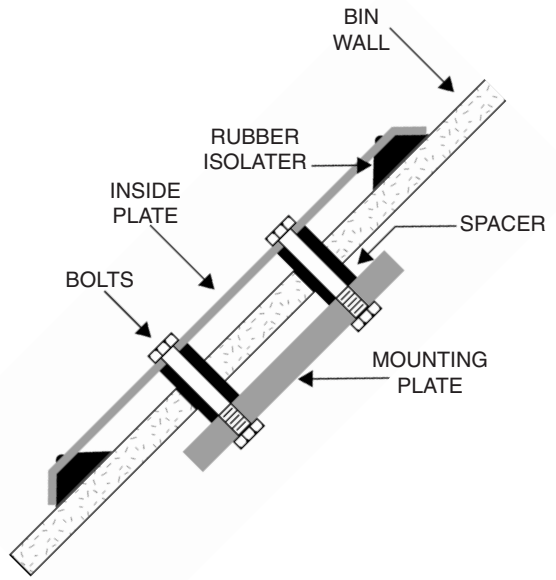

(fig.111)

MOUNTING TO WOOD BINS AND HOPPERS

Your SPV Rotary Electric Vibrator can be attached to wood bins or hoppers with a few modifications, as given below:

Cut a large steel plate to cover the inside of the bin wall to which you will attach your vibrator.

Drill corresponding holes through the mounting channel, wooden planks, and inside plate.

Bolt the channel directly through the wooden planks to the inside plate with 5/8” or 3/4” carriage bolts. Depending on the width of the planks, use 2-3 bolts per plank.

Skip weld the mounting plate to the channel so that the length of the vibrator will run parallel to the ground when mounted.

MOUNTING TO CONCRETE BINS AND HOPPERS

Cut a steel plate large enough so that the center is one third of the way up the bin wall. Bend the edges of this plate down to keep material out from under it.

Drill four corresponding holes through the center of the inside plate and on the outside mounting plate.

Cut four hollow steel spacers longer than the thickness of the outside wall.

Cut four corresponding holes into the bin wall. These holes should be larger in diameter than the spacers you will use around the bolts.

Place the spacers inside the bores.

Place four rubber isolaters under the four corners of the inside plate, and place the plate inside the bin wall.

Bolt the mounting plate through the spacers to the inside plate.

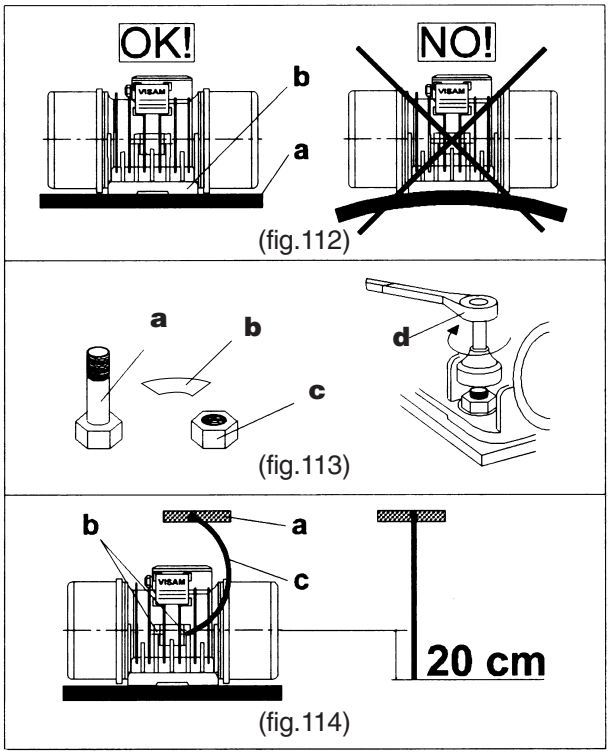
OK!
NO!
b
a
VISAM
(fig.112)
a
b
c
d
(fig.113)
b
a
c
VISAM
20 cm
(fig.114)

ATTACHING THE VIBRATOR

Make sure that the mounting surface is completely flat, within ±1/32”. Clean the mounting plate, removing any welding slag, paint, or dirt (fig.112).

Attach the vibrator to the mounting plate using at least grade 5 bolts (a), bellville washers (b), and nuts (c). Use a torque wrench (d) set at the torque given in section 7.3 (fig.113).

WARNING
DO NOT LEAVE ANY OF THE MOUNTING HOLES UNUSED! DAMAGE TO VIBRATOR WILL OCCUR.

WARNING
IF MOUNTING BOLTS ARE NOT TIGHTENED PROPERLY, VIBRATOR CAN BE DESTROYED.

Secure the vibrator to the bin with a steel safety cable (c) attached to the eyebolts (b) on the main casing. The safety cable must be strong enough to support the weight of the vibrator in case of mounting failure, and should be no longer than 8” (20 cm) (fig.114).

APPENDIX B: TROUBLESHOOTING

VIBRATOR WON'T START

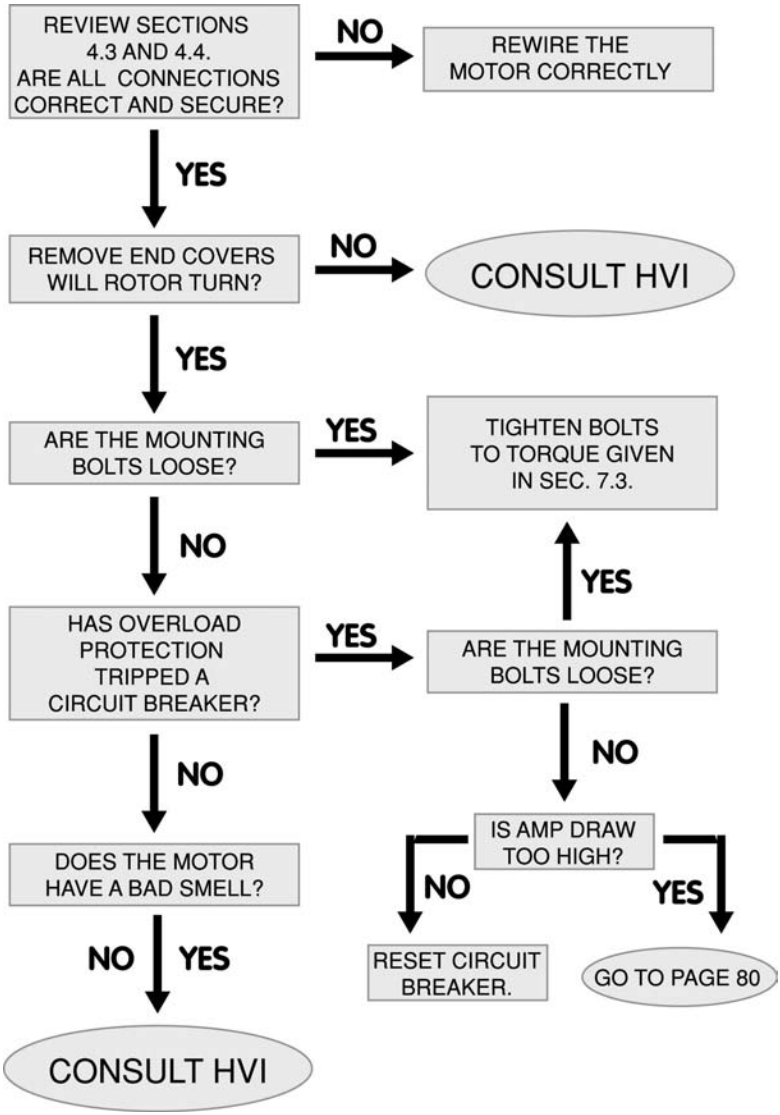

AMP DRAW IS TOO HIGH

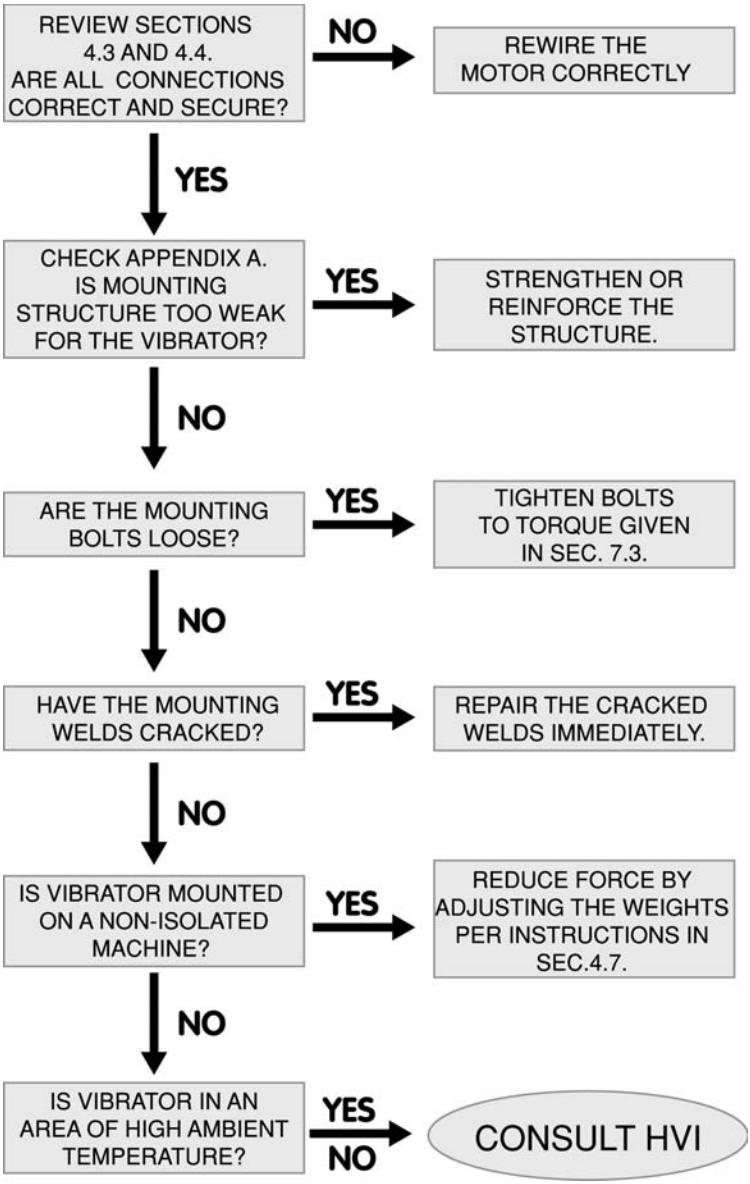
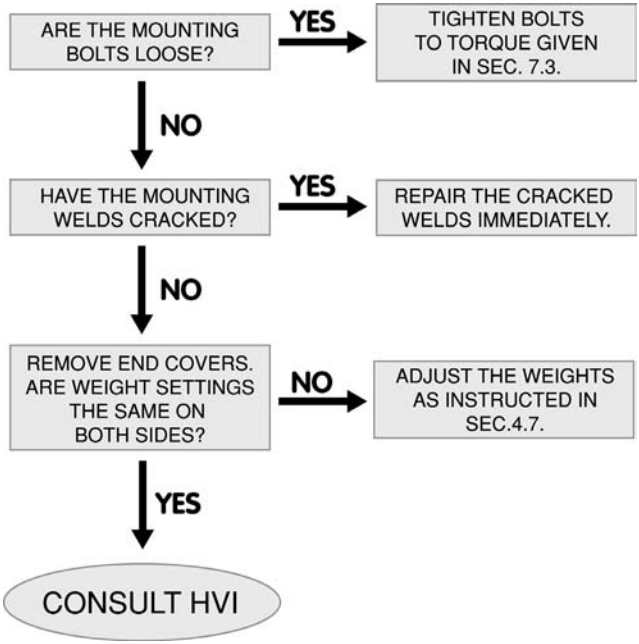
VIBRATOR MAKES POUNDING NOISE